Discussiones Mathematicae
Graph Theory 41 (2021) 481–501
doi:10.7151/dmgt.2205

INTERNALLY 4-CONNECTED GRAPHS WITH NO {CUBE, V_8}-MINOR

Chanun Lewchalermvongs

Department of Mathematics, Faculty of Science, and
Centre of Excellence in Mathematics
Mahidol University, Bangkok 10400, Thailand

e-mail: chanun.lew@mahidol.edu

and

Nawarat Ananchuen

Centre of Excellence in Mathematics
Mahidol University, Bangkok 10400, Thailand

e-mail: nananchuen@yahoo.com

Abstract

A simple graph is a minor of another if the first is obtained from the second by deleting vertices, deleting edges, contracting edges, and deleting loops and parallel edges that are created when we contract edges. A cube is an internally 4-connected planar graph with eight vertices and twelve edges corresponding to the skeleton of the cube in the platonic solid, and the Wagner graph V_8 is an internally 4-connected nonplanar graph obtained from a cube by introducing a twist. A complete characterization of all internally 4-connected graphs with no V_8 minor is given in J. Maharry and N. Robertson, *The structure of graphs not topologically containing the Wagner graph*, J. Combin. Theory Ser. B 121 (2016) 398–420; on the other hand, only a characterization of 3-connected graphs with no cube minor is given in J. Maharry, *A characterization of graphs with no cube minor*, J. Combin. Theory Ser. B 80 (2008) 179–201. In this paper we determine all internally 4-connected graphs that contain neither cube nor V_8 as minors. This result provides a step closer to a complete characterization of all internally 4-connected graphs with no cube minor.

Keywords: internally 4-connected, minor, cube graph, V_8 graph.

2010 Mathematics Subject Classification: 05C83.

1. Introduction

A graph G is called *H-free*, where H is a graph, if no minor of G is isomorphic to H. The structure of H-free graphs can be used to studied other properties of the class of graphs; in addition, many important problems in graph theory can be formulated in terms of H-free graphs. For example, the four color theorem can be equivalently stated as: all K_5-free graphs are 4-colorable, where K_5 is a complete graph on five vertices. Hadwiger's Conjecture states that every K_n-free graph is $n-1$ colorable, where K_n is a complete graph on n vertices. This conjecture is still open for $n \geq 7$ and the main difficulty for proving the conjecture is the lack of structural information on K_n-free graphs. Determining K_6-free graphs is one of the two most famous problems in this area, and another problem is to determine Petersen-free graphs, see Figure 1. Notice that both graphs have fifteen edges. As an attempt to better understand these graphs, we try to exclude 3-connected graphs H with at most fifteen edges. The complement of a path on seven vertices, $\overline{P}_7$, also has 15 edges and it is the largest graph H for which 4-connected H-free graphs are completely determined, see [5]. The octahedron with an additional edge is a graph with 13 edges and its characterization problem is solved in [8]. The octahedron, the cube, and V_8 are graphs H with twelve edges and their characterizations can be found in [3, 6, 7], and [9], respectively. For H with at most eleven edges, all H-free graphs have been determined and their results are surveyed in [4].

Let k be a non-negative integer. A *k-separation* of a graph G is an unordered pair $\{G_1, G_2\}$ of induced subgraphs of G such that $V(G_1) \cup V(G_2) = V(G)$, $E(G_1) \cup E(G_2) = E(G)$, $V(G_1) - V(G_2) \neq \emptyset$, $V(G_2) - V(G_1) \neq \emptyset$, and $|V(G_1) \cap V(G_2)| = k$. If G has a k-separation, then there is $X \subseteq V(G)$ such that $|X| = k$ and $G \setminus X$ has at least two components. A 3-connected graph G on at least five vertices is said to be *internally* 4*-connected* if for every 3-separation $\{G_1, G_2\}$ of G, one of them is isomorphic to $K_{1,3}$. The characterization of 3-connected cube-free graphs is solved in [7]; however, the result does not completely determine all the internally 4-connected cube-free graphs, see the theorem below. For each integer $n \geq 3$, let V_{2n} denote a Möbius ladder, which is a graph obtained from a cycle on $2n$ vertices by joining the n pairs of opposite vertices. Notice that V_6 is $K_{3,3}$. For any graph G, the line graph of G, denoted by $L(G)$, is a graph such that each vertex of $L(G)$ represents an edge of G, and two vertices of $L(G)$ are adjacent if and only if their corresponding edges share a common end vertex in G. The 3*-sum* is an operation of combining two graphs by identifying a triangle (C_3) of one graph with a triangle of the other graph to produce a new graph.

Theorem 1 [7]**.** *A* 3*-connected graph G is cube-free if and only if G is a minor of a graph constructed from $L(Petersen)$, $L(V_{2n})$ for each integer $n \geq 3$ (Figure* 1*), and the ten graphs in Figure* 2*, of order ≤ 8, by* 3*-sums over the triangles shaded*

or the vertices of the triangle circled.

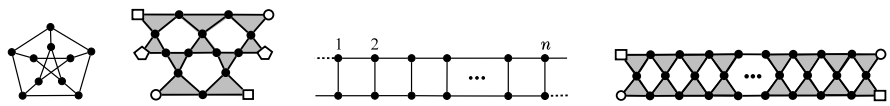

Figure 1. Petersen graph, L(Petersen), V_{2n} and $L(V_{2n})$.

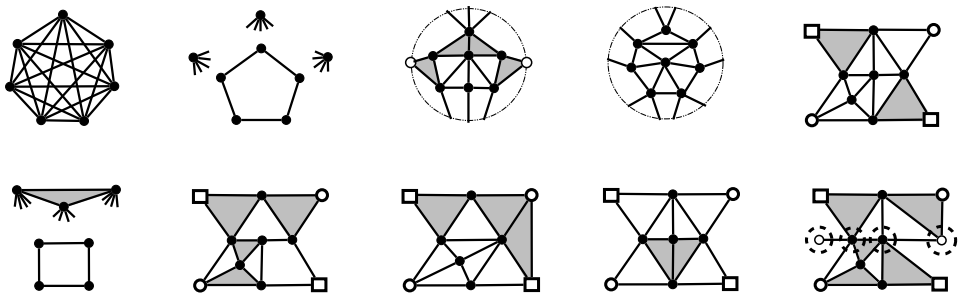

Figure 2. The ten graphs of order ≤ 8 in [7].

This theorem contains an (possibly printing) error in the second last graph, that contains two triangles shaded. Performing two 3-sums of K_4's over these triangles results in a cube-minor.

By a graph we mean a finite, simple, undirected graph. All undefined terminology can be found in [2]. In this paper, we consider internally 4-connected {cube, V_8}-free graphs. To state our main result we need a few definitions. Let $K_{m,n}$ be a complete bipartite graph with partitions of m and n vertices. Let $\mathcal{K}$ consist of internally 4-connected nonplanar graphs that are obtained from spanning subgraphs of some $K_{4,n}$ ($n \geq 4$) by adding edges to the color class of size four.

Theorem 2. *Let G be an internally 4-connected {cube, V_8}-free graph. Then G satisfies one of the following:*

(i) *G has at most seven vertices,*

(ii) *G is isomorphic to $L(K_{3,3})$,*

(iii) *G is isomorphic to $K_{3,n}$ for some $n \geq 5$,*

(iv) *G is a graph in $\mathcal{K}$, which is one of the six types of graph shown in Figure 3.*

We close this section by providing an outline of the rest of the paper. In the next section, we introduce a characterization of internally 4-connected V_8-free graphs and a chain theorem for internally 4-connected graphs. Our proof of Theorem 2 will be divided into two parts, Sections 3 and 4. First, we determine

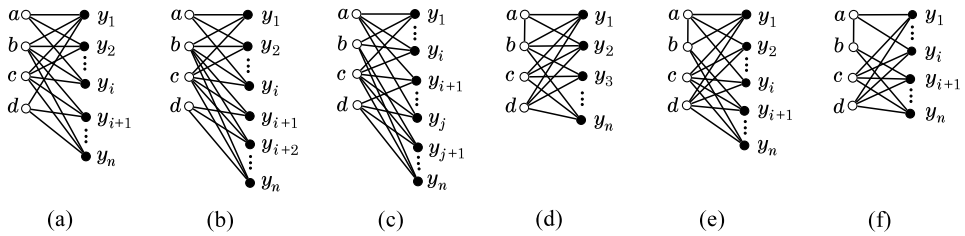

Figure 3. The six-type of graph in Theorem 2(iv).

all internally 4-connected nonplanar $\{\text{cube}, V_8\}$-free graphs. Then we prove Theorem 2 by showing that all internally 4-connected planar graphs on at least eight vertices contains a cube-minor.

2. Basic Lemmas

All internally 4-connected graphs V_8-free graphs are determined in [9]. To state the theorem we need to define a few classes of graphs. For each integer $n \geq 3$, a *double-wheel*, DW_n $(n \geq 3)$, is a graph on $n+2$ vertices obtained from a cycle C_n by adding two nonadjacent vertices u, v and joining them to all vertices on the cycle. An *alternating double-wheel* AW_{2n} is a subgraph of DW_{2n} $(n \geq 3)$ such that u and v are alternately adjacent to every vertex in C_{2n}. Notice that AW_6 is a cube, see Figure 4. For each integer $n \geq 3$, let DW_n^+ and AW_{2n}^+ be graphs obtained from DW_n and AW_{2n}, respectively, by joining u and v. Let $\mathcal{D}^+ = \{DW_n^+ : n \geq 3\} \cup \{AW_{2n}^+ : n \geq 3\}$. Then every graph in $\mathcal{D}^+$ is nonplanar.

Theorem 3 [9]**.** *Every internally* 4*-connected* V_8*-free graph* G *satisfies one of the following conditions:*

(i) G *is planar,*

(ii) G *has at most seven vertices,*

(iii) G *is isomorphic to* $L(K_{3,3})$*,*

(iv) $G \setminus \{w, x, y, z\}$ *has no edges for some* $w, x, y, z \in V(G)$*, or* G *is in* $\mathcal{D}^+$*.*

This result suggests a process for determining all internally 4-connected nonplanar $\{\text{cube}, V_8\}$-free graphs. We also need the following lemma from [9].

Lemma 4 [9]**.** *If* G *is an internally-*4*-connected graph, then either* G *contains two disjoint cycles, each of which contains at least four edges, or* G *has at most seven vertices, or* G *is isomorphic to* $L(K_{3,3})$*.*

This lemma implies that $L(K_{3,3})$ is $\{\text{cube}, V_8\}$-free. Another main tool is a chain theorem for internally 4-connected graphs. To explain this result we need

a few definitions. For each integer $n \geq 5$, let C_n^2 be a graph obtained from a cycle C_n by joining all pairs of vertices of distance two on the cycle. Notice that $C_5^2 = DW_3^+ = K_5$, see Figure 4. Let *terrahawk* be the graph shown in Figure 4, which can be obtained from a cube by adding a new vertex and joining it to four vertices in the same C_4. We denote the number of edges of a graph G by $\|G\|$.

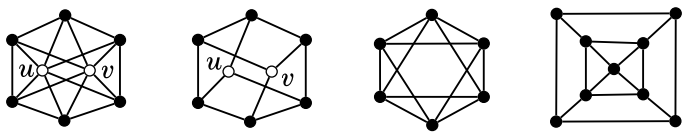

Figure 4. Graphs DW_6, AW_6, C_6^2, and terrahawk.

Let $G \setminus e$ denote the graph obtained from G by deleting an edge e. The reverse operation of deleting an edge is *adding* an edge, that is G obtained from $G \setminus e$ by adding edge e. We use G/e denote the graph obtained from G by first contracting an edge e then deleting all but one edge from each parallel family. The reverse operation of contracting an edge is *splitting* a vertex. To be precise, suppose v is a vertex with degree at least four in a graph G. Let $N_G(v)$ denote the set of *neighbors* of v, which are vertices adjacent to v. Let $X, Y \subseteq N_G(v)$ such that $X \cup Y = N_G(v)$ and $|X|, |Y| \geq 2$. The splitting v results in the new graph G' obtained from $G \setminus v$ by adding two new adjacent vertices x, y then joining x to all vertices in X and y to all vertices in Y. We call G' a *split* of G, v a *predecessor of* x and y, and the other vertex in G *a predecessor of itself* in G'. Note that $G'/xy = G$ and G' is 3-connected as long as G is. To investigate internally 4-connected graphs, the following chain theorem of Chun, Mayhew and Oxley [1] will be useful in creating an algorithm that generates all internally 4-connected graphs.

Theorem 5 [1]. *Let G be an internally 4-connected graph such that G is not $K_{3,3}$, terrahawk, C_n^2 $(n \geq 5)$, or AW_{2n} $(n \geq 3)$. Then G has an internally 4-connected minor H with $1 \leq \|G\| - \|H\| \leq 3$.*

This theorem says that every internally 4-connected can be obtained from $K_{3,3}$, terrahawk, C_n^2 $(n \geq 5)$, or AW_{2n} $(n \geq 3)$ by repeatedly adding edges and splitting vertices. Equivalently, for every internally 4-connected graph G, there exists a sequence of internally 4-connected graphs $G_0, G_1, G_2, \ldots, G_k$ such that

(i) $G_k \cong G$ and G_0 is $K_{3,3}$, terrahawk, C_n^2 $(n \geq 5)$, or AW_{2n} $(n \geq 3)$, and

(ii) G_i $(i = 2, \ldots, k)$ is obtained from G_{i-1} by adding edges or splitting vertices at most three times.

3. Nonplanar {cube, V_8}-Free Graphs

The cube and V_8 can be obtained from two disjoint cycles C_4 by connecting them with four edges that preserves the ordering of the cycles; however, V_8 is nonplanar. To determine all internally 4-connected nonplanar {cube, V_8}-free graphs, we will follow the characterization in Theorem 3. All graphs with at most seven vertices have no cube and V_8 minors.

We now consider the case that an internally 4-connected graph G satisfies the condition (iv) in Theorem 3. Let X be a subset of $V(G)$ of at most four vertices such that $G \setminus X$ has no edges, and let $Y = V(G) - X$ consisting of $y_1, y_2, \ldots, y_n$ for some $n \in \mathbb{N}$. Then all vertices in Y are nonadjacent. Since G is internally 4-connected, $|X| \geq 3$ and each y_i is adjacent to at least three vertices in X. Moreover, if $|X| = 3$, then G is $K_{3,n}$ for some $n \geq 5$. We will show that $K_{3,n}$ is cube-free. We denote the classes of graphs in Figure 5 as follows: $\mathcal{K}_I = \{K_{3,n} : n \geq 5\}$, $\mathcal{K}_{II} = \{K'_{3,n} : n \geq 5\}$, $\mathcal{K}_{III} = \{K''_{3,n} : n \geq 5\}$, $\mathcal{K}_{IV} = \{K'_{2,n} : n \geq 6\}$, and $\mathcal{K}_V = \{K_{1,n} : n \geq 7\}$. Let $\mathcal{K}_U = \mathcal{K}_I \cup \mathcal{K}_{II} \cup \mathcal{K}_{III} \cup \mathcal{K}_{IV} \cup \mathcal{K}_V$. To study a graph in these classes, a new vertex obtained from contracting an edge xy for $x \in X$ and $y \in Y$ will be put in the partition set X to keep the number of vertices in X.

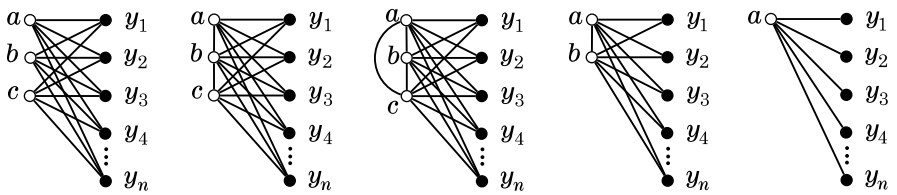

Figure 5. Graphs $K_{3,n}$, $K'_{3,n}$, $K''_{3,n}$, $K'_{2,n}$, and $K_{1,n}$.

Lemma 6. *For any $G \in \mathcal{K}_U$, G is cube-free.*

Proof. Let $G \in \mathcal{K}_U$. Since all vertices in Y are nonadjacent, if the cube is a subgraph of G, each disjoint C_4 of the cube must contain two vertices of X. However, $|X| \leq 3$, G does not contain a cube-subgraph. If the cube is a minor of G, then the minor can be obtained from G by a sequence of vertex deletions, edge deletions, and edge contractions, where the order of operations is irrelevant. Suppose that a sequence of edge contractions is performed on G first. Notice that there are two types of edge in G; an edge connecting between X and Y, and an edge connecting vertices in X. Then for all $x \in X$ and $y \in Y$, $G/xy \in \mathcal{K}_U$, and for $x_i, x_j \in X$, $G/x_ix_j \in \mathcal{K}_U$. After performing the sequence of edge contractions on G, the resulting graph G^* is in $\mathcal{K}_U$. Then G^* does not contain a cube-subgraph. Hence, G is cube-free. ■

From Theorem 3 and Lemma 6, we obtain the following lemma.

Lemma 7. *For $n \geq 5$, $K_{3,n}$ is $\{\text{cube}, V_8\}$-free.*

Next, we consider an internally 4-connected graph G satisfying the condition (iv) in Theorem 3 with $|X| = 4$. Then $G \in \mathcal{K}$ and $|Y| \geq 4$. Since G is internally 4-connected, at most one pair of vertices in X can be adjacent. Notice that for $x \in X$ and $y \in Y$, G/xy is not internally 4-connected. To study this type of graph, we relax the connectivity of G to 3-connected. Let $\mathcal{L}$ consist of 3-connected spanning subgraphs of some $K_{4,n}$, $n \geq 4$. Then $\mathcal{L} \subseteq \mathcal{K}$. The cube is also in $\mathcal{L}$, see Figure 6.

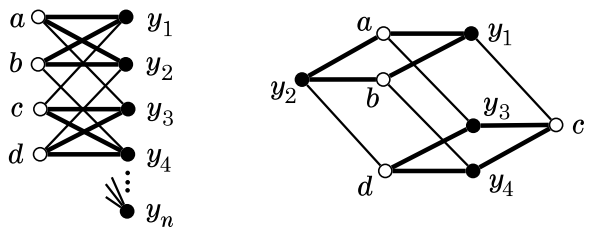

Figure 6. The cube in $\mathcal{L}$.

Lemma 8. *A graph G in $\mathcal{L}$ contains a cube-subgraph if and only if there are $y_1, y_2, y_3, y_4 \in Y$ such that $\{a, b, c\} \subseteq N(y_1)$, $\{a, b, d\} \subseteq N(y_2)$, $\{a, c, d\} \subseteq N(y_3)$, and $\{b, c, d\} \subseteq N(y_4)$.*

Proof. Let $G \in \mathcal{L}$. If there are $y_1, y_2, y_3, y_4 \in Y$ such that $\{a, b, c\} \subseteq N(y_1)$, $\{a, b, d\} \subseteq N(y_2)$, $\{a, c, d\} \subseteq N(y_3)$, and $\{b, c, d\} \subseteq N(y_4)$, then there are two disjoint C_4's, $C_{4,1} : a, y_1, b, y_2$ and $C_{4,2} : y_3, c, y_4, d$, which four edges ay_3, y_1c, by_4, and y_2d preserve the ordering of the cycles. These form a cube-subgraph in G. Suppose that G contains a cube-subgraph. Since both X and Y consist of mutually nonadjacent vertices, each disjoint C_4 of the cube must contain exactly two vertices in X and two vertices in Y; $C_{4,1} : a, y_1, b, y_2$ and $C_{4,2} : y_3, c, y_4, d$. We assume without loss of generality that edges ay_3, y_1c, by_4, and y_2d are edges in G which orderly join $C_{4,1}$ and $C_{4,2}$. Thus, $\{a, b, c\} \subseteq N(y_1)$, $\{a, b, d\} \subseteq N(y_2)$, $\{a, c, d\} \subseteq N(y_3)$, and $\{b, c, d\} \subseteq N(y_4)$. ■

Let $\mathcal{L}'$ be a class of 3-connected graphs that are obtained from spanning subgraphs of some $K_{4,n}$ ($n \geq 4$) by adding edges to the color class of size four. Then $\mathcal{L} \subseteq \mathcal{K} \subseteq \mathcal{L}'$.

Lemma 9. *Let $G \in \mathcal{L}'$. Then the following statements are equivalent.*

(i) *G contains a cube-subgraph.*

(ii) *$G \setminus E(G[X])$ contains a cube-subgraph, where $G[X]$ is an induced subgraph of G with vertex set X, the color class of size four.*

(iii) *There are* $y_1, y_2, y_3, y_4 \in Y$ *such that* $\{a, b, c\} \subseteq N(y_1)$, $\{a, b, d\} \subseteq N(y_2)$, $\{a, c, d\} \subseteq N(y_3)$, *and* $\{b, c, d\} \subseteq N(y_4)$.

Proof. (i)⇒(ii) Since G contains a cube-subgraph, if an edge uv joining two disjoint C_4's of the cube is in $E(G[X])$, we have that $u, v \in X$, and there is another edge wz joining those two C_4's such that $w, z \in Y$. This contradicts with the fact that all vertices in Y are nonadjacent. So $G \setminus E(G[X])$ contains a cube-subgraph.

(ii)⇒(iii) Since $G \setminus E(G[X]) \in \mathcal{L}$, by Lemma 8, we obtain (iii).

(iii)⇒(i) From Lemma 8, $G \setminus E(G[X])$ contains a cube-subgraph, so does G. ■

Lemma 10. *Let* $G \in \mathcal{L}'$. *Then* G *contains a cube-subgraph if and only if* G *contains a cube-minor.*

Proof. The forward direction is obvious. Suppose that G contains a cube-minor. We first perform all edge contractions in constructing the cube. Let G^* be the resulting graph. Then G^* contains a cube-subgraph. Note that contracting an edge in $G[X]$ leads to a graph in $\mathcal{K}_U$, by Lemma 6, it is cube-free. Thus, only edges connecting X and Y are contracted. By putting the new vertex obtaining from each edge contraction to the partite set X, G^* is in $\mathcal{L}'$. By Lemma 9, the cube is a subgraph $G^* \setminus E(G^*[X])$, which is a subgraph of $G \setminus E(G[X])$. So G contains a cube-subgraph. ■

From Lemma 10, to find an internally 4-connected cube-free graph G with the condition (iv), we have to find a graph with condition (iv) and no cube-subgraph.

Lemma 11. *An internally* 4*-connected graph* $G \in \mathcal{K}$ *with* $X = \{a, b, c, d\}$ *contains a cube-minor if and only if there are vertices* $y_1, y_2, y_3, y_4 \in Y$ *such that* $\{a, b, c\} \subseteq N(y_1)$, $\{a, b, d\} \subseteq N(y_2)$, $\{a, c, d\} \subseteq N(y_3)$, *and* $\{b, c, d\} \subseteq N(y_4)$.

Remark 12. Let G be an internally 4-connected cube-free graph in $\mathcal{K}$. Then G misses a neighbor set in Lemma 11. Since G is internally 4-connected, if X contains two pairs of adjacent vertices, G contains $K_{4,n}$ as a subgraph for some $n \geq 4$. So at most two vertices in X are adjacent. Then G can be classified as follows.

1. All vertices in X are nonadjacent and there is only one vertex y_1 in Y whose neighbor set is X. Then $G \setminus y_1$ misses two neighbor sets in Lemma 11. We may assume that there are no vertices in $Y \setminus y_1$ containing neighbor sets $\{a, b, d\}$ and $\{a, c, d\}$, see Figure 3(a).

2. All vertices in X are nonadjacent and $|N(y_i)| = 3$ for $i = 1, \ldots, n$. Then G misses at most two neighbor sets in Lemma 11. We may assume that there are no vertices in Y containing neighbor sets $\{a, b, d\}$ or $\{a, c, d\}$, see Figures 3(b) and (c).

3. Two vertices in X are adjacent, say a and b. There are three different cases.

(a) There are only two vertices in Y, say y_1 and y_2, such that $N(y_1) = N(y_2) = X$. Then $G \setminus \{y_1, y_2\}$ misses three neighbor sets in Lemma 11, and all y_i's, $3 \leq i \leq n$, have the same neighbor set. We may assume that $N(y_i) = \{b, c, d\}$ for $i = 3, \ldots, n$, see Figure 3(d).

(b) There is only one vertex in Y, say y_1, such that $N(y_1) = X$. Then $G \setminus y_1$ misses two neighbor sets in Lemma 11. We may assume that there are no vertices in $Y \setminus y_1$ containing neighbor sets $\{a, b, c\}$ and $\{a, b, d\}$, see Figure 3(e).

(c) For $i = 1, \ldots, n$, $|N(y_i)| = 3$. Then G misses only two neighbor sets in Lemma 11. We may assume that there are no vertices in Y containing neighbor sets $\{a, b, c\}$ and $\{a, b, d\}$, see Figure 3(f).

We now consider graphs in $\mathcal{D}^+$. Notice that DW_6^+ contains a cube-minor by deleting edge uv, and AW_{2n}^+ is a subgraph of DW_{2n}^+ for each $n \geq 3$. The following lemma follows directly from the structure of cube-free graphs in Theorem 1.

Lemma 13. *For each integer $n \geq 3$, DW_{n+3}^+ and AW_{2n}^+ contain a cube-minor.*

4. Proof of Theorem 2

To prove Theorem 2, we claim that all internally 4-connected planar graphs with at least eight vertices contain a cube-minor. From Theorem 5, this statement can be implied by the following lemma.

Lemma 14. *The only internally 4-connected planar cube-free graphs are C_6^2 and DW_5.*

Proof. Let G be an internally 4-connected planar cube-free graph. Suppose, on contrary, that G is neither C_6^2 nor DW_5. From Theorem 5, there is a sequence of internally 4-connected graphs $G_0, G_1, \ldots, G_k$ satisfying the chain theorem such that G_k is isomorphic to G, and G_0 is isomorphic to $K_{3,3}$, terrahawk, C_n^2 ($n \geq 5$) or AW_{2n} ($n \geq 3$). Notice that G_i is a minor of G_j for all $i < j$. Then for each i, G_i is a planar cube-free graph. Since both terrahawk and AW_{2n} ($n \geq 3$) contain a cube-minor, G_0 is not isomorphic to these two graphs. From Kuratowski Theorem, a graph is planar if and only if it contains neither K_5 (or C_5^2) nor $K_{3,3}$ as a minor. So G_0 is not isomorphic to both C_5^2 and $K_{3,3}$. We now consider C_n^2 ($n > 5$). Let $\{v_1, v_2, \ldots, v_n\}$ be the vertex set of C_n^2 such that for all $1 \leq i \leq n$, $N(v_i) = \{v_{i-2}, v_{i-1}, v_{i+1}, v_{i+2}\}$, where the indices are taken modulo n. By contracting edges v_1v_3 and v_2v_4, we obtain C_{n-2}^2. For all odd $n > 5$, C_n^2 contains C_5^2 as a minor, so C_n^2 is nonplanar. Thus, G_0 is not isomorphic to C_n^2, for all odd

$n > 5$. Since a cube can be obtained from C_8^2 by deleting edges v_1v_2, v_3v_4, v_5v_6 and v_7v_8, C_8^2 contains a cube-minor, and so does C_n^2 for all even $n \geq 10$. So we only need to consider planar graphs constructed from C_6^2 by adding edges and splitting vertices.

Suppose G_0 is isomorphic to C_6^2. Since adding an edge joining two nonadjacent vertices in C_6^2 gives a nonplanar graph with $K_{3,3}$-subgraph, we assume that graph G_1 in the sequence is obtained from C_6^2 by splitting vertices at least one time. Up to symmetry, C_6^2 has ten splits, one of them is DW_5 and six of them are nonplanar, as illustrated in Figure 7.

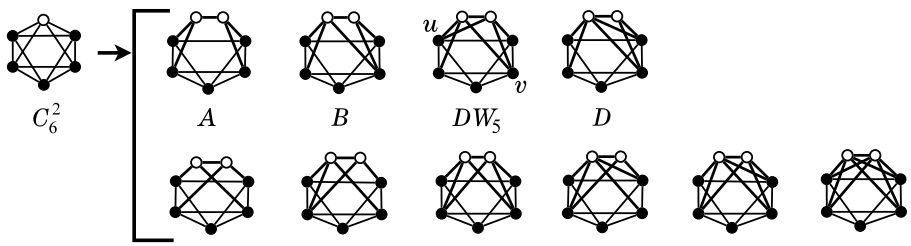

Figure 7. Ten splits of C_6^2, where all graphs in the second row are nonplanar.

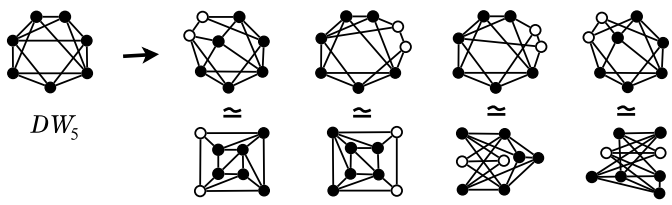

Figure 8. Splits of DW_5 where the first two graphs contain a cube-minor and the last two graphs contain a $K_{3,3}$-minor.

From [9], DW_5 is the only internally 4-connected planar graph on seven vertices. If G_1 is DW_5, then G_2 is a split of DW_5. Up to symmetry, there are four splits of DW_5 as shown in Figure 8 such that all splits of DW_5 contain one of these graphs as a minor. In these four graphs, two of them contain a cube-minor and two of them are nonplanar. Since G is a planar cube-free graph, G_1 is not isomorphic to DW_5. So G_1 is constructed from graph A, B, or D in Figure 7 by splitting vertices at least one times and adding edges. We claim that every internally 4-connected planar graph constructed from these three graphs by such methods contains a cube-minor.

For graph A, up to symmetry, every planar one-time split of A contains an 8-vertex graph in Figure 9 as a subgraph. We can construct all planar internally 4-connected graphs on eight vertices from A by adding edges to 8-vertex graphs in Figure 9 and preserving the planar and the internally 4-connected properties. To

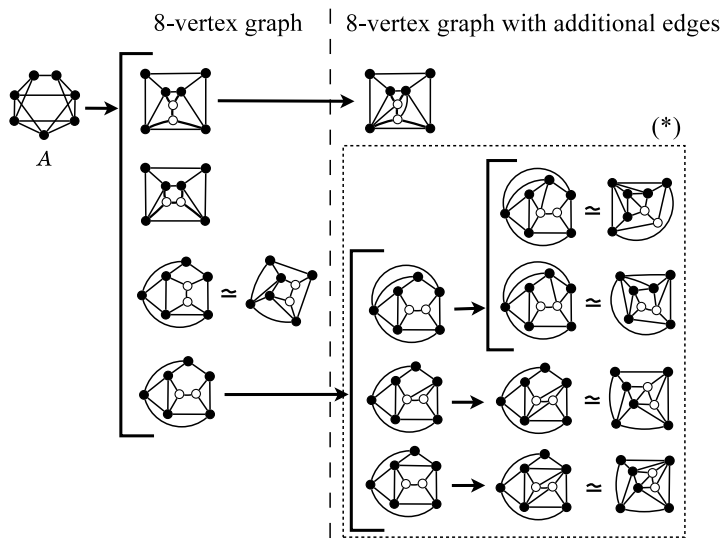

Figure 9. Planar splits of graph A on eight vertices (set A1).

preserve such properties, if a split has a 3-separation $\{G_1, G_2\}$ such that neither G_1 nor G_2 is isomorphic to $K_{1,3}$, then we can add an edge joining two vertices in G_1 and G_2 in which their predecessors are adjacent, see 8-vertex graphs with additional edges in Figure 9. So every planar internally 4-connected graph on eight vertices constructed from A contains a non-cube-free graph in Figure 9 as a subgraph. Thus, all of these graphs contain a cube-minor. For splitting A two times, up to symmetry, every planar two-time split of A contains a 9-vertex graph in Figures 10, 11, and 12 as a subgraph. By the same argument, every planar internally 4-connected graph on nine vertices constructed from A contains a cube-minor. So every internally 4-connected planar graph constructed from A contains a cube-minor. The proof for splits of graphs B is of the same flavor, see Figures 13, 14, 15, 16, and 17. For graph D, up to symmetry, every planar one-time split of D contains an 8-vertex graph in Figure 18 as a subgraph. Since every internally 4-connected graph with K_4-subgraph is nonplanar, there are no internally 4-connected planar graphs on eight and nine vertices that can be constructed from a graph in the dotted rectangles in Figures 18 and 19 by adding edges. Then, for the same reason, every internally 4-connected planar graph constructed from D contains a cube-minor, see Figures 18, 19, and 20. So G_1 contains a cube-minor, and so does G. This is a contradiction since G is cube-free. Hence, G is isomorphic to either C_6^2 or DW_5. ■

***Proof of Theorem* 2.** From Lemmas 4, 7, 11, and 13, we obtain a characterization of internally 4-connected nonplanar {cube, V_8}-free graphs. The result of Theorem 2 follows from this characterization and Lemma 14. ■

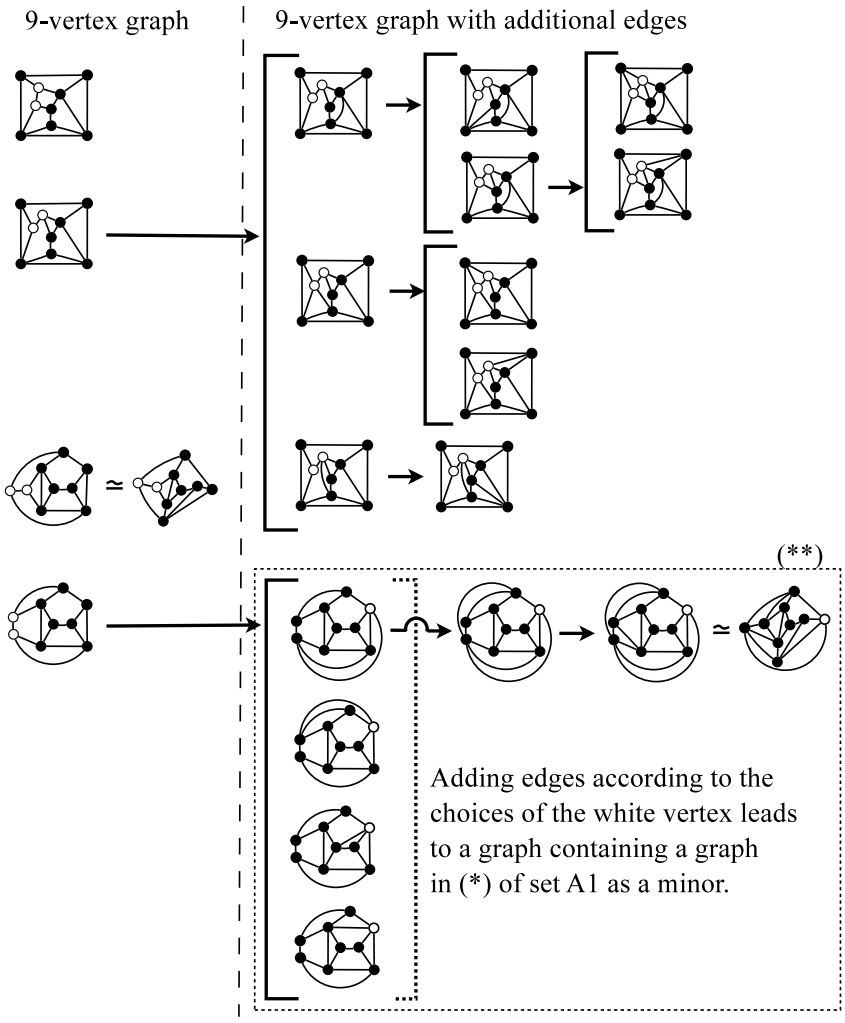

Figure 10. Planar splits of graph A on nine vertices (set A2).

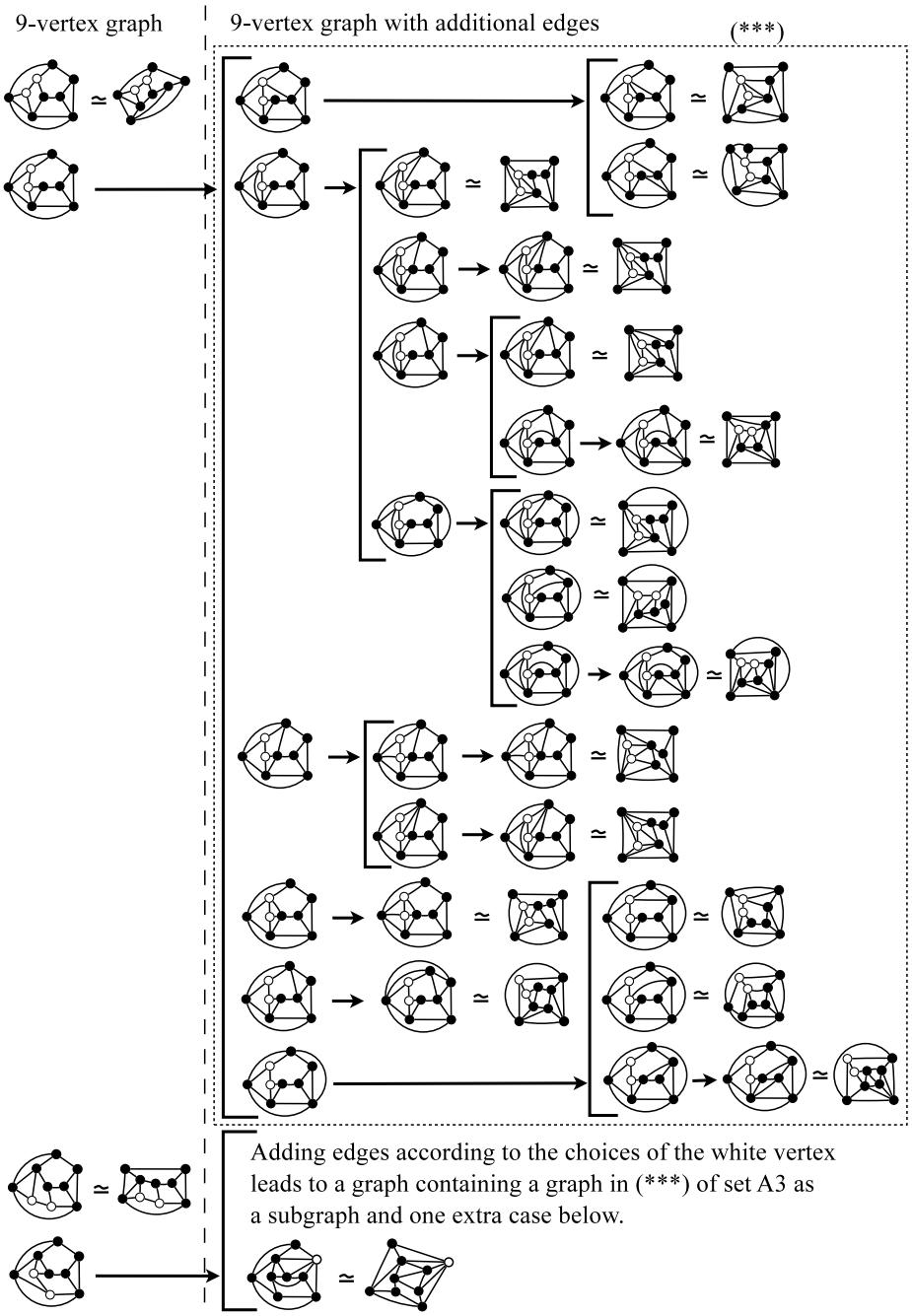

Figure 11. Planar splits of graph A on nine vertices (set A3).

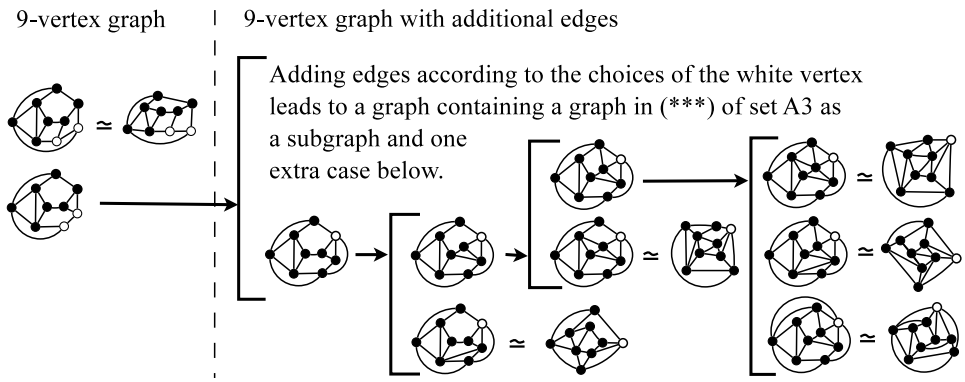

Figure 12. Planar splits of graph A on nine vertices (set A4).

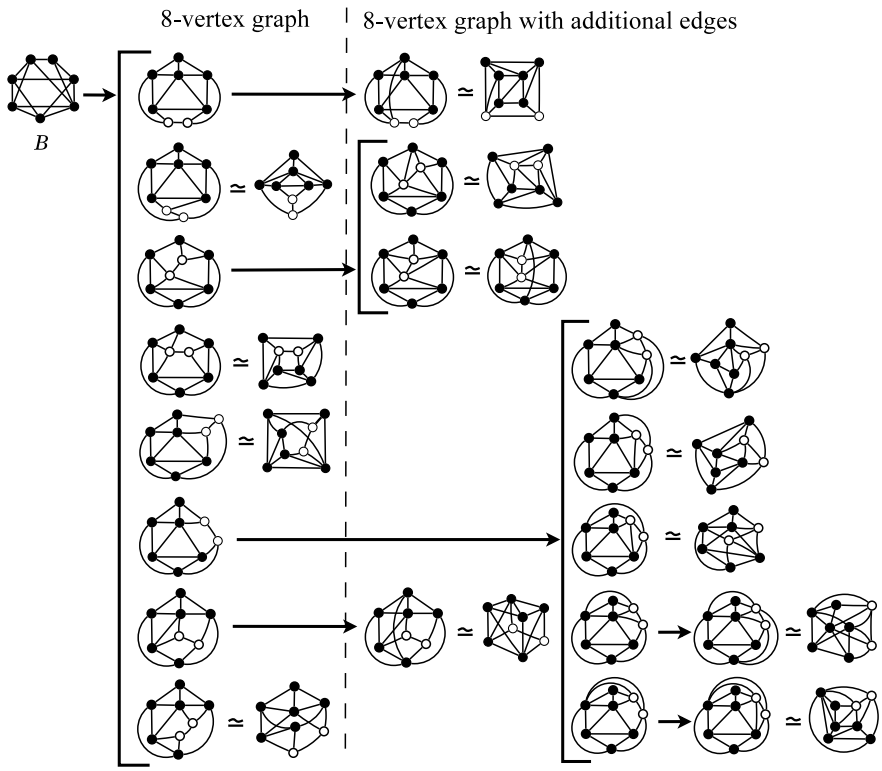

Figure 13. Planar splits of graph B on eight vertices.

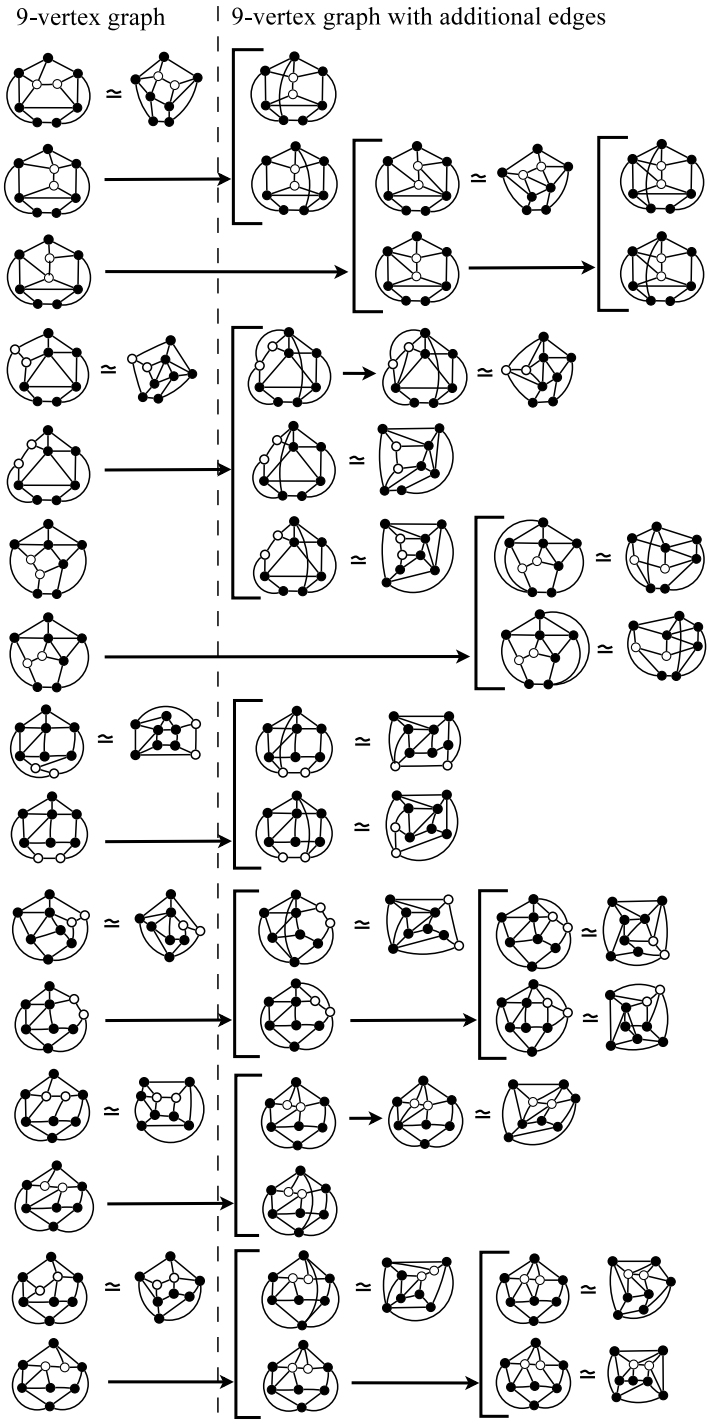

Figure 14. Planar splits of graph B on nine vertices.

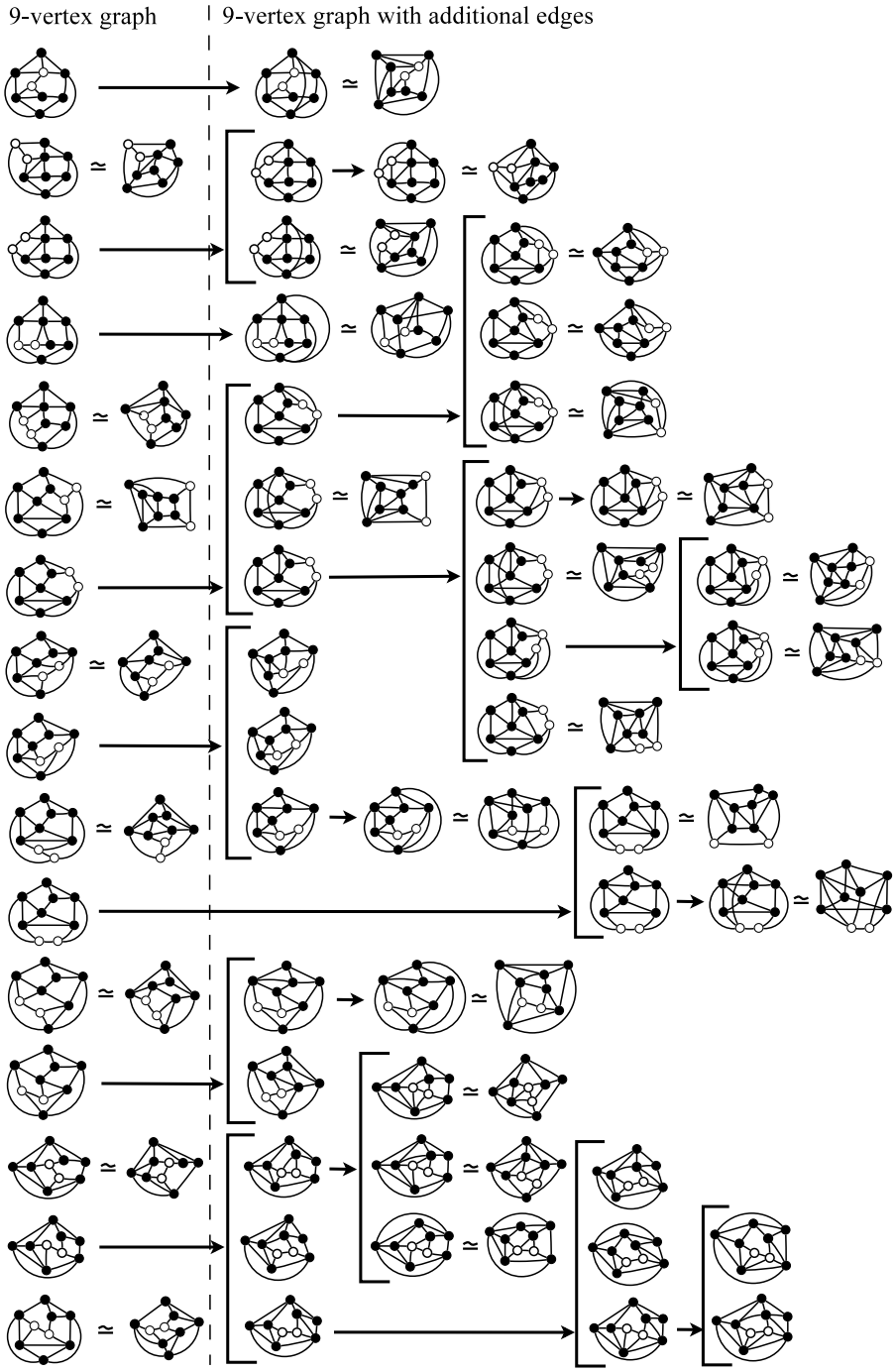

Figure 15. Planar splits of graph B on nine vertices.

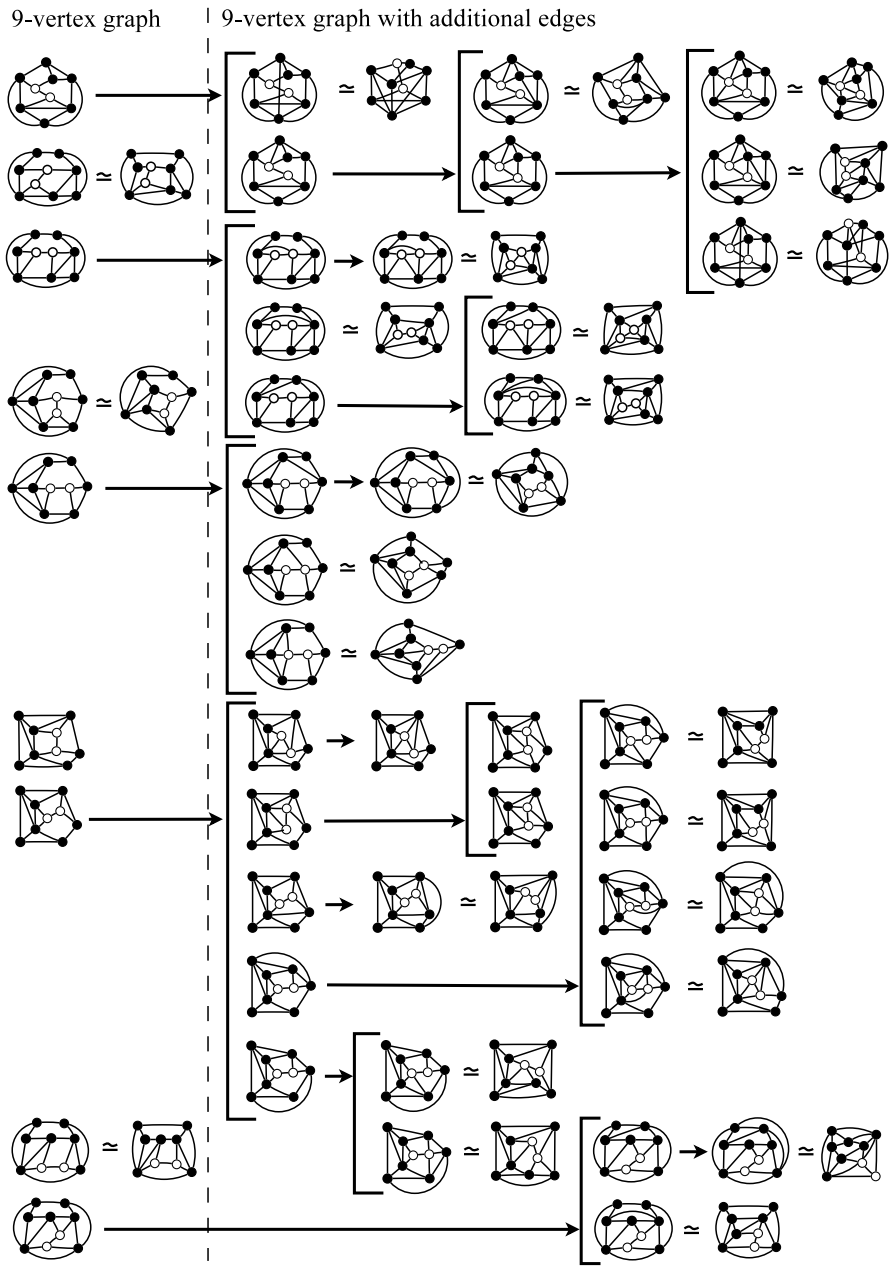

Figure 16. Planar splits of graph B on nine vertices.

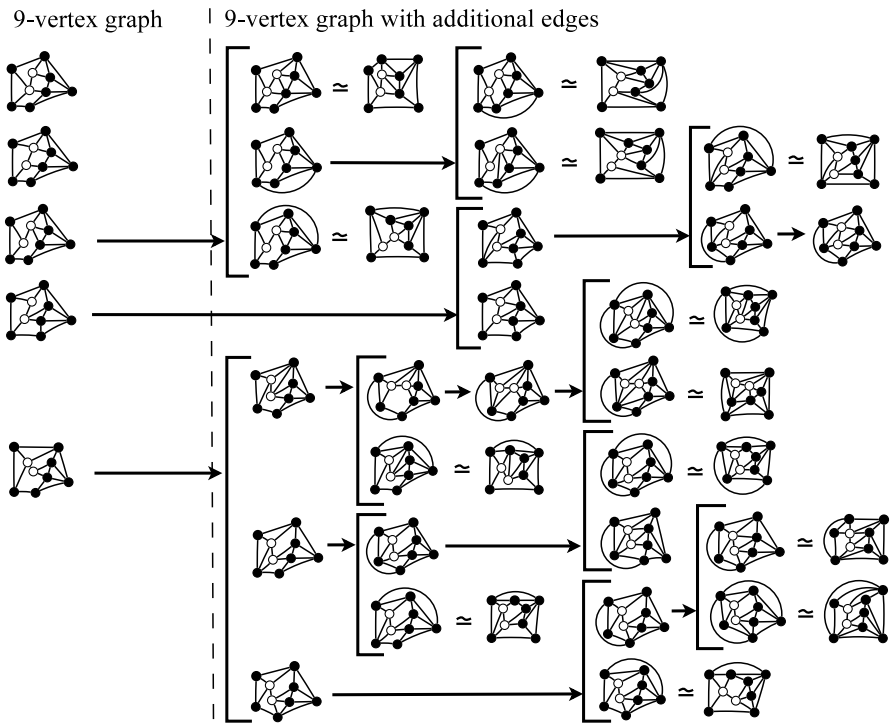

Figure 17. Planar splits of graph B on nine vertices.

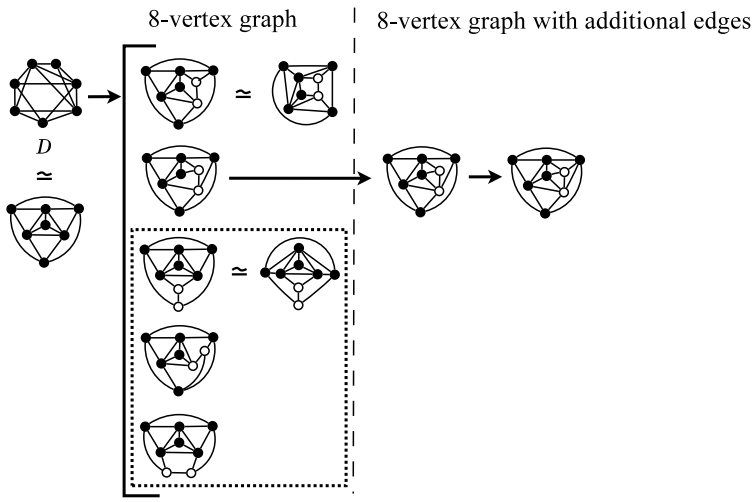

Figure 18. Splits of graph D on eight vertices, where graphs in the dotted rectangle contain a K_4-subgraph.

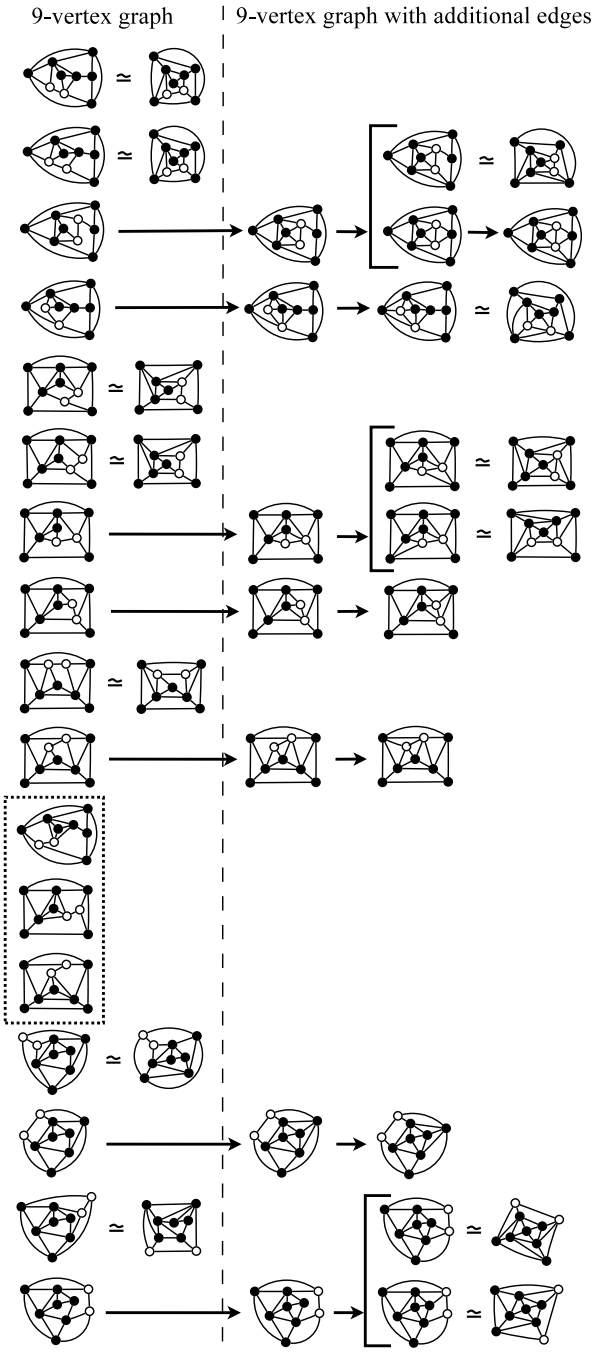

Figure 19. Splits of graph D on nine vertices, where graphs in the dotted rectangle contain a K_4-subgraph.

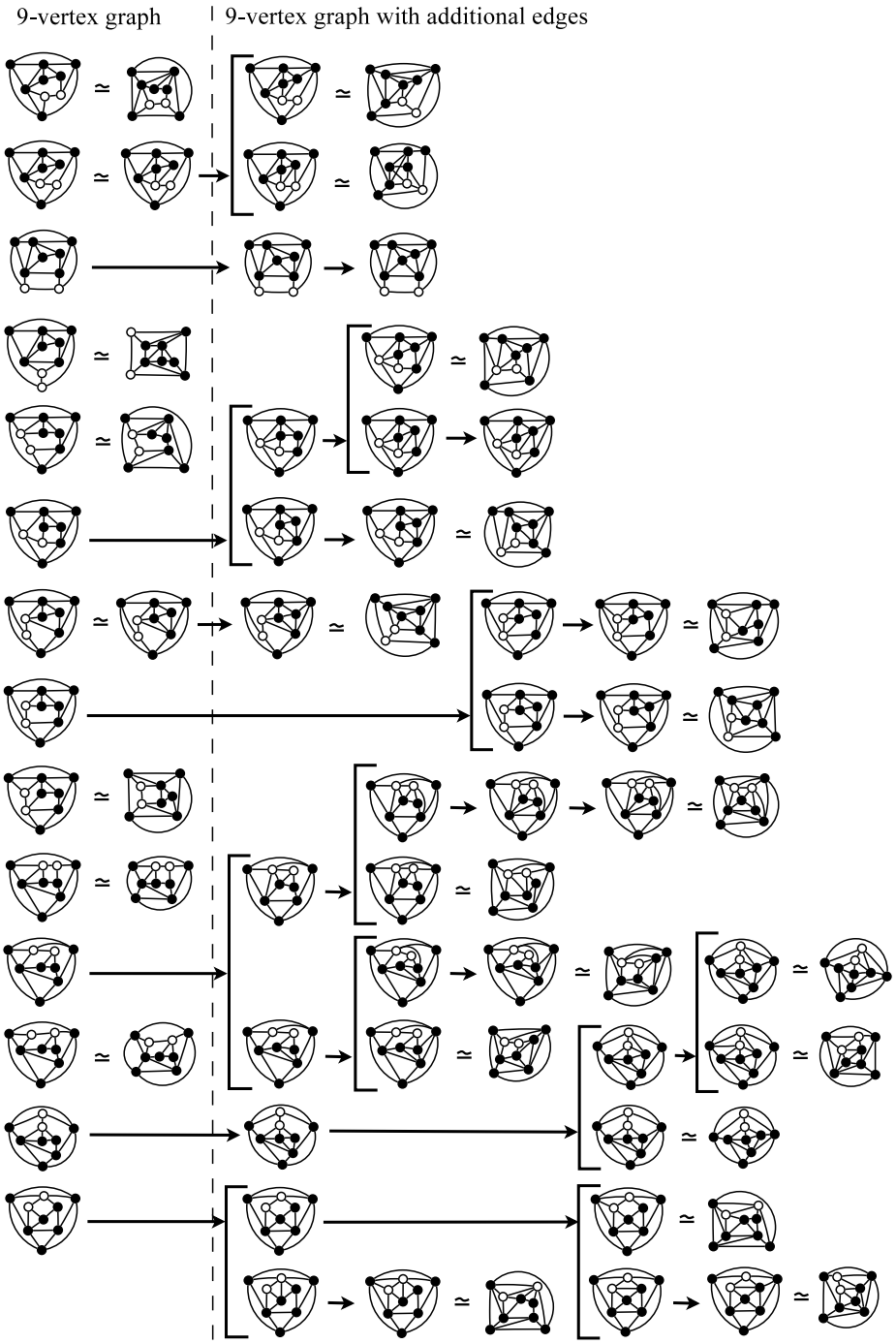

Figure 20. Splits of graph D on nine vertices.

Acknowledgment

The authors would like to thank Professor Guoli Ding for his valuable suggestions, and also the referees for their comments and suggestions on the manuscript. This research project was supported by the Thailand Research Fund (TRF grant MRG6080201), and Faculty of Science, Mahidol University.

References

[1] C. Chun, D. Mayhew and J. Oxley, *Constructing internally 4-connected binary matroids*, Adv. Appl. Math. **50** (2013) 16–45.
doi:10.1016/j.aam.2012.03.005

[2] R. Diestel, Graph Theory (Springer Heidelberg Dordrecht London New York, 2010).

[3] G. Ding, *A characterization of graphs with no octahedron minor*, J. Graph Theory **74** (2013) 143–162.
doi:10.1002/jgt.21699

[4] G. Ding and C. Liu, *Excluding a small minor*, Discrete Appl. Math. **161** (2013) 355–368.
doi:10.1016/j.dam.2012.09.001

[5] G. Ding, C. Lewchalermvongs and J. Maharry, *Graphs with no $\bar{P}_7$-minor*, Electron. J. Combin. **23** (2016) #P2.16.

[6] J. Maharry, *An excluded minor theorem for the octahedron*, J. Graph Theory **31** (1999) 95–100.
doi:10.1002/(SICI)1097-0118(199906)31:2⟨95::AID-JGT2⟩3.0.CO;2-N

[7] J. Maharry, *A characterization of graphs with no cube minor*, J. Combin. Theory Ser. B **80** (2008) 179–201.
doi:10.1006/jctb.2000.1968

[8] J. Maharry, *An excluded minor theorem for the octahedron plus an edge*, J. Graph Theory **57** (2008) 124–130.
doi:10.1002/jgt.20272

[9] J. Maharry and N. Robertson, *The structure of graphs not topologically containing the Wagner graph*, J. Combin. Theory Ser. B **121** (2016) 398–420.
doi:10.1016/j.jctb.2016.07.011

Received 28 June 2018
Revised 29 December 2018
Accepted 10 January 2019