Discussiones Mathematicae
Graph Theory 39 (2019) 925–937
doi:10.7151/dmgt.2113

ON THE INDEPENDENCE NUMBER OF TRACEABLE 2-CONNECTED CLAW-FREE GRAPHS

Shipeng Wang[1] and Liming Xiong[1,2]

[1] *School of Mathematics and Statistics*
Beijing Institute of Technology
Beijing 100081, P.R. China

[2] *Beijing Key Laboratory on MCAACI*
Beijing Institute of Technology
Beijing 100081, P.R. China

e-mail: spwang22@yahoo.com
lmxiong@bit.edu.cn

Abstract

A well-known theorem by Chvátal-Erdős [*A note on Hamilton circuits*, Discrete Math. 2 (1972) 111–135] states that if the independence number of a graph G is at most its connectivity plus one, then G is traceable. In this article, we show that every 2-connected claw-free graph with independence number $\alpha(G) \leq 6$ is traceable or belongs to two exceptional families of well-defined graphs. As a corollary, we also show that every 2-connected claw-free graph with independence number $\alpha(G) \leq 5$ is traceable.

Keywords: traceability, independence number, matching number, trail, closure.

2010 Mathematics Subject Classification: 05C38, 05C69, 05C70.

1. Introduction

We consider finite simple undirected graphs $G = (V(G), E(G))$, and for concepts and notations not defined here we refer to [1]. The circumference of G, denoted by $c(G)$, is the length of a longest cycle of G. For $x \in V(G)$, $N_G(x)$ denotes the neighborhood of x, for $F \subset G$, we denote $N_F(x) = N_G(x) \cap V(F)$, and for $H \subset G$, we denote $N_F(H) = \bigcup_{v \in V(H)} N_F(v)$. We denote by $\alpha(G), \alpha'(G)$ and $\kappa(G)$ the independence number, the maximum matching number and the connectivity of a graph G, respectively.

For $X \subset V(G)$, $\langle X \rangle_G$ denotes the induced subgraph on X in G. For a subgraph C of G and for two vertices $x_1, x_2 \in V(C)$, we use $dist_C(x, y)$ to denote the length of a shortest path between x and y in C. A *pendant vertex* of a graph is a vertex of degree 1, and a *pendant edge* is an edge having a pendant vertex as an end vertex. For a subgraph X of a graph G, by *shrink* X we understand to delete all edges between vertices of X and then identify the vertices of X into a single vertex, we denote it by G/X. The *core* of a graph G, denoted by G_0, is obtained by recursively deleting the pendant vertices in G. We define $\Lambda(G)$ to be the set of the vertices in G which are also vertices in G_0 and adjacent to a pendant vertex in G.

A graph is called *Hamiltonian* if it contains a Hamilton cycle, i.e., a cycle containing all its vertices. A graph is called *traceable* if it contains a Hamilton path, i.e., a path containing all its vertices. A *trail* in a graph G is a sequence $W = v_0e_1v_l \cdots v_{l-1}e_lv_l$, whose terms are alternately vertices (not necessarily distinct) and distinct edges of G, such that v_{i-1} and v_i are ends of e_i, $1 \leq i \leq l$. For convenience, we sometimes abbreviate the term of $v_0e_1v_l \cdots v_{l-1}e_lv_l$ to $v_0v_l \cdots v_{l-1}v_l$. A *spanning trail* of a graph G is a trail that contains all the vertices of G.

Chvátal and Erdős proved the following result.

Theorem 1 (Chvátal and Erdős [4]). *Every connected graph G of order at least three with $\alpha(G) \leq \kappa(G)+1$ ($\alpha(G) \leq \kappa(G)$, respectively) is traceable (Hamiltonian, respectively).*

Now, we focus our attention on claw-free graphs, i.e., $K_{1,3}$-free graphs. Claw-free graphs have been extensively studied for more than four decades. In particular, finding sufficient conditions for the Hamiltonicity of 2-connected claw-free graphs have been the subject of many papers (see for example the survey [5]). Ryjáček [10] introduced the *closure* of a claw-free graph G, which becomes a useful tool in investigating Hamiltonian properties of claw-free graphs. A vertex $x \in V(G)$ is *locally connected* if the neighborhood of x induces a connected subgraph in G. For $x \in V(G)$, the graph G'_x obtained from G by adding the edges $\{yz : y, z \in N_G(x) \text{ and } yz \notin E(G)\}$ is called the *local completion* of G at x. The closure of a claw-free graph G, denoted by $cl(G)$, is obtained from G by recursively performing local completions at any locally connected vertex with non-complete neighborhood, as long as it is possible. If H is a graph, then the *line graph* of H, denoted $L(H)$, is the graph with $E(H)$ as vertex set, in which two vertices are adjacent if and only if the corresponding edges have a vertex in common.

The following theorem provides fundamental properties of the closure operator.

Theorem 2 (Ryjáček [10]). *Let G be a claw-free graph. Then*

(i) *$cl(G)$ is uniquely determined,*

(ii) *G and $cl(G)$ have the same circumference,*

(iii) *$cl(G)$ is the line graph of a triangle-free graph.*

Our results are motivated by the following results which involve the independence number for Hamiltonicity of 2 or 3-connected claw-free graphs.

Theorem 3 (Xu, Li, Miao, Wang and Lai [12]). *Let G be a claw-free graph with $\kappa(G) \geq 2$ and $\alpha(G) \leq 3$. Then G is Hamiltonian if and only if the Ryjáček's closure of G is not isomorphic to the line graph of a member of $\{K_{2,3}^{s_1,s_2,s_3} : s_1 \geq s_2 \geq s_3 > 0\}$, where $K_{2,3}^{s_1,s_2,s_3}$ is obtained from $K_{2,3}$ by attaching s_i pendant vertices adjacent to each vertex of degree two.*

Theorem 4 (Flandrin and Li [6]). *Every claw-free graph G with $\kappa(G) \geq 3$ and $\alpha(G) \leq 2\kappa(G)$ is Hamiltonian.*

Theorem 5 (Chen [3]). *Let H be a 3-connected claw-free graph with $\alpha(H) \leq 7$. Then H is Hamiltonian or $cl(H) = L(G)$ where G is a graph with $\alpha'(G) = 7$ that is obtained from the Petersen graph P by adding some pendant edges or subdividing some edges of P.*

It is natural to ask what upper bound on the independence number of a 2-connected claw-free graph would guarantee its traceability. In this paper we prove Theorem 6 below by using our recent result from [11] (Theorem 10 in this paper), which allows us to avoid some possible case by case analysis (see our concluding remarks).

Before stating our main result, we need to define two families of graphs.

$\mathcal{C}_1 = \{H : H$ is obtained from G_1 shown in Figure 1, by adding at least one pendant edge to each vertex of degree two$\}$,

$\mathcal{C}_2 = \{H : H$ is obtained from G_2 shown in Figure 1, by adding at least one pendant edge to each vertex of degree two$\}$.

Theorem 6. *Let G be a 2-connected claw-free graph with independence number $\alpha(G) \leq 6$. Then G is traceable if and only if its Ryjáček's closure $cl(G) = L(H)$ where $H \in \mathcal{C}_1 \cup \mathcal{C}_2$.*

Note that each graph G in $\mathcal{C}_1 \cup \mathcal{C}_2$ has matching number 6, it follows that $\alpha(L(G)) = 6$ and we then obtain the following result immediately.

Corollary 7. *Every 2-connected claw-free graph with independence number $\alpha(G) \leq 5$ is traceable.*

In the next section, we will present some basic results and useful definitions from [11]. In Section 3, we will prove Theorem 6, and in the finial section we give some concluding remarks.

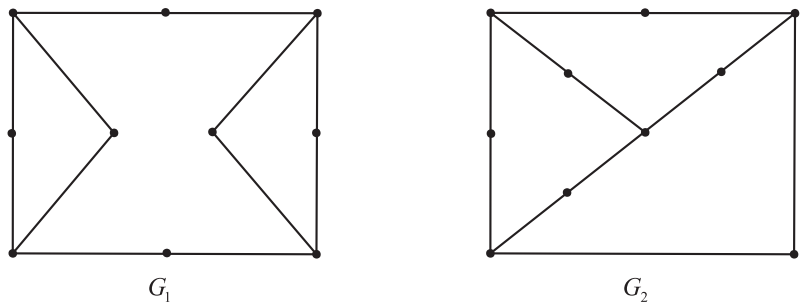

Figure 1. Two graphs of order 10 that have no spanning trail.

2. Preliminaries and Basic Results

An edge cut X of G is *essential* if $G\backslash X$ has at least two nontrivial components. For an integer $k > 0$, a graph G is *essentially k-edge-connected* if G does not have an essential edge-cut X with $|X| < k$. Note that a graph G is essentially k-edge-connected if and only if $L(G)$ is k-connected or complete.

Theorem 8 (Brandt, Favaron and Ryjáček [2]). *Let G be a claw-free graph. Then G is traceable if and only if $cl(G)$ is traceable.*

A subgraph H of a graph G is *dominating* if every edge of G has at least one end in H. A subgraph H of a graph G is *even* if every vertex of H has even degree. Harary and Nash-Williams [7] showed that for a graph H with $|E(H)| \geq 3$, $L(H)$ is Hamiltonian if and only if H has a dominating connected even subgraph, i.e., dominating closed trail. Similarly to this, there is also a close relationship between dominating subgraph in a graph and the property of being traceable for its line graph.

Theorem 9 (Li, Lai and Zhan [8]). *Let G be a graph with $|E(G)| \geq 3$. Then the line graph $L(G)$ is traceable if and only if G has a dominating connected subgraph, i.e., dominating trail.*

In what follows we use the concepts and notation introduced in [11].

Let G be a 2-connected graph and let C be a cycle of G. Then any component D of $G - V(C)$ has at least two distinct neighbors on C. For any path P in D, if the two ends (possibly only one if P is a vertex) of P have two distinct neighbors x_1, x_2 on C, then P is called a 2-*attaching path* of C in D, and these two vertices x_1, x_2 are called a 2-*attaching pair* of P on C. Furthermore, if D has a longest 2-attaching path P of order k, then D is called a k-*component* of $G - V(C)$. Let G be an essentially 2-edge-connected graph and let $B_1, \ldots, B_i, \ldots, B_t$ be all the blocks of the core G_0 of G and let $H_i = B_i \cup \{e : e$ is a pendant edge of G and

e has one end in $V(B_i) \cap \Lambda(G)\}$. Then H_i is called a *super-block* of G. If H_i contains at least two cut vertices of G_0, then H_i is called an *inner-super-block* of G; otherwise, H_i is called an *outer-super-block* of G.

The following result was proved in [11] which will be applied to prove Theorem 6.

Lemma 10 (Wang and Xiong [11]). *Let G be a 2-connected graph with circumference $c(G)$ and let C be a longest cycle of G. Then*

(i) *if D is a k-component of $G - V(C)$, then $k \leq \left\lfloor \frac{c(G)}{2} \right\rfloor - 1$,*

(ii) *every 2-component of $G - V(C)$ is a star,*

(iii) *if $c(G) \leq 5$, then G has a spanning trail starting from any vertex,*

(iv) *if $c(G) \leq 7$, then G has a spanning trail.*

Lemma 11 (Niu and Xiong [9]). *Let G be a 2-edge-connected graph of order at most ten. Then G has a spanning trail or $G \in \{G_1, G_2\}$, where G_1, G_2 are shown in Figure 1.*

3. The Proof of Theorem 6

In order to prove Theorem 6, we first need to prove the following result.

Theorem 12. *Let G be a 2-connected graph of order 11 and circumference $c(G) = 9$ and let C be a longest cycle of G such that $G - V(C)$ has two 1-components. If G has no spanning trail, then $G \in \{G_3, G_4, G_5\}$, where G_3, G_4, G_5 are shown in Figure 2.*

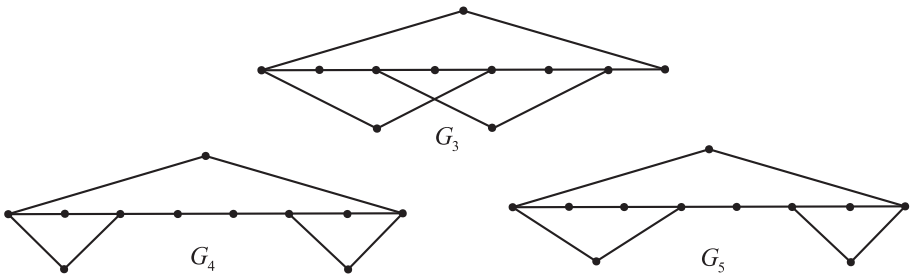

Figure 2. Three graphs of order 11 that have no spanning trail.

Proof. Let $C = v_0v_1 \cdots v_8v_0$ be a longest cycle such that u_1 and u_2 are the two 1-components of $G - V(C)$. Since G has no spanning trail and is 2-connected, it is easy to see that a vertex on C can have at most one neighbour in $\{u_1, u_2\}$ and no two consecutive vertices on C have neighbours in $\{u_1, u_2\}$. Hence $\{u_1, u_2\}$ has

at most four neighbours on C. Since G is 2-connected, $\{u_1, u_2\}$ has exactly four neighbours on C. We may assume that v_0, v_2, v_4, v_6 are the neighbours of $\{u_1, u_2\}$ on C. Let G' be the graph obtained from C and two additional vertices u_1, u_2, i.e., $G' = \langle V(C) \cup \{u_1, u_2\}\rangle_G$. Then G' is isomorphic to those graphs shown in Figure 2. Now it is easy to check that adding any chord to C will yield a spanning trail and therefore $G = G'$. The proof is complete. ■

The following result is the foundation of Theorem 6.

Theorem 13. *Let G be a connected triangle-free graph such that $\kappa(L(G)) \geq 2$ and $\alpha(L(G)) \leq 6$. Then $L(G)$ is traceable if and only if $G \notin \mathcal{C}_1 \cup \mathcal{C}_2$.*

Note that the core of an essentially 2-edge-connected graph is 2-edge-connected, the proof of Theorem 13 can be deduced from the following two results.

Theorem 14. *Let G be a connected triangle-free graph such that its core G_0 is 2-connected and $\kappa(L(G)) \geq 2$ and $\alpha(L(G)) \leq 6$. Then $L(G)$ is traceable if and only if $G \notin \mathcal{C}_1 \cup \mathcal{C}_2$.*

Theorem 15. *Let G be a connected triangle-free graph such that its core G_0 has connectivity one and $\kappa(L(G)) \geq 2$ and $\alpha(L(G)) \leq 6$, then $L(G)$ is traceable.*

Now, we may finish the proof of Theorem 6.

***Proof of Theorem* 6.** Suppose that G is non-traceable, then by Theorem 8, $cl(G)$ is also non-traceable. By Theorem 2(iii), there exists a triangle-free graph H such that $cl(G) = L(H)$. As adding any edge to a graph does not increase the independence number α and does not decrease the connectivity κ, both $\kappa(L(H)) = \kappa(cl(G)) \geq \kappa(G) \geq 2$ and $\alpha(L(H)) = \alpha(cl(G)) \leq \alpha(G) \leq 6$ hold. Then by Theorem 13, $cl(G) = L(H)$ is traceable if and only if $H \notin \mathcal{C}_1 \cup \mathcal{C}_2$. ■

***Proof of Theorem* 14.** Since a maximum independent set in $L(G)$ corresponds to a maximum matching in G, $\alpha'(G) = \alpha(L(G)) \leq 6$. Suppose that $L(G)$ is not traceable, it suffices to show that $G \in \mathcal{C}_1 \cup \mathcal{C}_2$. By Theorem 9, G has no dominating trail. Let $C = v_1 v_2 \cdots v_{c(G)} v_1$ be a longest cycle of G. Since the core G_0 of G is a 2-connected graph that has no spanning trail, $c(G) \geq 8$ by Lemma 10(iv). Since C is not a dominating trail of G, $E(G - V(C)) \neq \emptyset$. Similarly $G - V(C)$ is not a star. Hence $\alpha'(G - V(C)) > 1$. It follows that $c(G) \leq 9$ since otherwise $\alpha'(C) \geq 5$, so $\alpha'(G - V(C)) \leq \alpha'(G) - \alpha'(C) \leq 6 - 5 = 1$, a contradiction.

Claim 16. *$\alpha'(D) \leq 2$ for every component D of $G - V(C)$.*

Proof. Since $8 \leq c(G) \leq 9$, $\alpha'(C) = 4$. Since $\alpha'(G) \leq 6$, $\alpha'(G - V(C)) \leq \alpha'(G) - \alpha'(C) \leq 6 - 4 = 2$. Hence $\alpha'(D) \leq \alpha'(G - V(C)) \leq 2$ for every component D of $G - V(C)$. This proves Claim 16. □

It follows immediately from Claim 16 that $|\Lambda(G)\backslash V(C))| \leq 2$.

Claim 17. *Every nontrivial component of $G - V(C)$ has a dominating path P such that one of the end vertices of P is adjacent to C.*

Proof. Suppose, by contradiction, that there exists a component D of $G - V(C)$ such that D has no dominating path such that one of its end vertices is adjacent to C. Since $8 \leq |V(C)| \leq 9$ and by Lemma 10(i), $D \cap G_0$ is a k-component of $G_0 - V(C)$ with $1 \leq k \leq 3$, then $2 \leq k \leq 3$; otherwise, $D \cap G_0$ is a vertex v_0, then clearly v_0 is adjacent to C.

Suppose first that $k = 2$, then by Lemma 10(ii), $D \cap G_0$ is a star with the center x and leaves $y_1, y_2, \ldots, y_s$. Since G_0 is 2-connected, $N_{G_0}(y_i) \cap V(C) \neq \emptyset$ for each $i \in \{1, \ldots, s\}$. Since $|\Lambda(G)\backslash V(C))| \leq 2$, $|\{y_1, \ldots, y_s\} \cap \Lambda(G)| \leq 2$. Then $s \geq 2$; otherwise xy_1 is a dominating path of D such that y_1 is adjacent to C, a contradiction. Without loss of generality, we may assume that $(\{y_1, \ldots, y_s\} \cap \Lambda(G)) \subseteq \{y_1, y_2\}$, then y_1xy_2 is a dominating path of D such that y_1 is adjacent to C, a contradiction.

Now consider $k = 3$. Let $x_1x_2x_3$ be a 2-attaching path of C in $D \cap G_0$. Then $E(D - \{x_1, x_2, x_3\}) \neq \emptyset$, since otherwise $x_1x_2x_3$ is a dominating path of D such that x_1 is adjacent to C. Thus $\alpha'(D - \{x_1, x_2, x_3\}) \geq 1$. Also by Claim 16, $1 \leq \alpha'(D - \{x_1, x_2, x_3\}) \leq \alpha'(D) - \alpha'(x_1x_2x_3) \leq 2 - 1 = 1$, this implies that $D - \{x_1, x_2, x_3\}$ is also a star D' with the center y and leaves $z_1, \ldots, z_t$. Since D is connected, we need to consider all possible connections between $\{x_1, x_2, x_3\}$ and $V(D')$.

(a) The center y in D' is adjacent to some vertex in $\{x_1, x_2, x_3\}$. If $yx_1 \in E(G)$, then $yx_1x_2x_3$ is a dominating path of D such that x_3 is adjacent to C, a contradiction. Hence $yx_1 \notin E(G)$, up to symmetry, we have $yx_3 \notin E(G)$ and hence $yx_2 \in E(G)$. Then x_1 is not adjacent to any vertex in $D - \{x_2, y, z_1\}$; otherwise, there exists a vertex u in $D - \{x_2, y, z_1\}$ such that $ux_1 \in E(G)$, then $\{x_1u, x_2x_3, yz_1\}$ is matching of D of size 3, contradicting Claim 16. Hence $z_1yx_2x_3$ is a dominating path in D such that x_3 is adjacent to C, a contradiction.

(b) The center of D' is not adjacent to any vertex in $\{x_1, x_2, x_3\}$. It means that $\{yx_1, yx_2, yx_3\} \cap E(G) = \emptyset$ and $t \geq 2$. Since D is connected, there exists a vertex in $\{z_1, \ldots, z_t\}$, say z_1, that is adjacent to one of $\{x_1, x_2, x_3\}$. We have $x_1z_1 \notin E(G)$, since otherwise $\{x_1z_1, x_2x_3, yz_2\}$ is a matching of D of size 3. By symmetry, we also have $x_3z_1 \notin E(G)$. The above facts imply that $x_2z_1 \in E(G)$. Again, by Claim 16, x_1 is not adjacent to any vertex in $D - \{x_2, y, z_1\}$, then $yz_1x_2x_3$ is a dominating path of D such that x_3 is adjacent to C. This proves Claim 17. $\square$

Since G has no dominating trail and by Claim 17, $G - V(C)$ should have at least two nontrivial components. Since $8 \leq |V(C)| \leq 9$ and $\alpha'(G) \leq 6$,

$\alpha'(G - V(C)) \leq 2$. This implies that $G - V(C)$ has exactly two nontrivial components D_1, D_2 and $\alpha'(D_i) = 1$, then D_i is a star. This implies that any edge in $D_i \cap G_0$ is a 2-attaching path of C in $D_i \cap G_0$ dominating all edges of D_i. Thus $D_i \cap G_0$ contains a dominating path of D_i starting from any vertex in $D_i \cap G_0$. Therefore, since G has no dominating trail, the following fact is easy.

Claim 18. *For any pair of vertices v_i, v_j with $v_i \in N_{G_0}(D_1) \cap V(C)$ and $v_j \in N_{G_0}(D_2) \cap V(C)$, it holds that $v_i \neq v_j$ and $v_iv_j \notin E(C)$.*

Claim 19. *For $i \in \{1, 2\}$, $D_i \cap G_0$ is a 1-component of $G_0 - V(C)$.*

Proof. By contradiction, suppose, without loss of generality, that $D_1 \cap G_0$ is a k-component of $G_0 - V(C)$ with $k \geq 2$. Let $x_1 \cdots x_k$ be a longest 2-attaching path of C in $D_1 \cap G_0$ with a 2-attaching pair $v_{i'}, v_{i''}$. Since C is a longest cycle of G, we have $3 \leq dist_C(v_{i'}, v_{i''}) \leq 4$. Suppose that $dist_C(v_{i'}, v_{i''}) = 4$, then, assume without loss of generality that $v_{i'} = v_1, v_{i''} = v_5$. Therefore, by Claim 18, $N_{G_0}(D_2) \cap \{v_1, v_2, v_4, v_5, v_6, v_{c(G)}\} = \emptyset$ and hence $N_{G_0}(D_2) \cap V(C) \subseteq \{v_3, v_7, v_{c(G)-1}\}$. Since C is a longest cycle of G, $N_{G_0}(D_2) \cap V(C) = \{v_3, v_7\}$ or $N_{G_0}(D_2) \cap V(C) = \{v_3, v_8\}$. Without loss of generality, we may assume that $N_{G_0}(D_2) \cap V(C) = \{v_3, v_7\}$, then there exists a 2-attaching path P of C in $D_2 \cap G_0$ with v_3, v_7 as its 2-attaching pair, hence $v_1x_1 \cdots x_kv_5v_4v_3Pv_7 \cdots v_{c(G)}v_1$ is a cycle of length at least $c(G) + 1$, a contradiction.

Hence we have $dist_C(v_{i'}, v_{i''}) = 3$. Without loss of generality, assume that $v_{i'} = v_1, v_{i''} = v_4$, then by Claim 18, $N_{G_0}(D_2) \cap \{v_1, v_2, v_3, v_4, v_5, v_{c(G)}\} = \emptyset$ and then $N_{G_0}(D_2) \cap V(C) \subseteq \{v_6, v_7, v_{c(G)-1}\}$. If $c(G) = 8$, then $N_{G_0}(D_2) \cap V(C) = \{v_6, v_7\}$, this yields a cycle of length at least 9, a contradiction. Hence we have $c(G) = 9$, then $N_{G_0}(D_2) \cap V(C) \subseteq \{v_6, v_7, v_8\}$ and thus $N_{G_0}(D_2) \cap V(C) = \{v_6, v_8\}$. Therefore, since C is a longest cycle of G, $D_2 \cap G_0$ is a 1-component v of $G_0 - V(C)$. Since D_2 is nontrivial, we may take a pendant edge vz_1 of G. Then v_5 has no neighbor in $G - V(C)$; otherwise, assume that v_5 has a neighbor z_2 in $G - V(C)$, then $\{x_1x_2, vz_1, v_5z_2, v_1v_2, v_3v_4, v_6v_7, v_8v_9\}$ is a matching of G, of size 7, contradicting $\alpha'(G) \leq 6$. Hence $vv_6v_7v_8v_9v_1v_2v_3v_4x_k \cdots x_1$ is a dominating trail of G, a contradiction. This proves Claim 19. □

Let $V_2(G_0)$ be the set of all vertices of degree of 2 in G_0. Recall that G_0 has no spanning trail.

Case 1. $|V(C)| = 9$. By Claim 19, $|V(G_0)| = 11$. Hence by Theorem 12, $G_0 \in \{G_3, G_4, G_5\}$, where G_3, G_4, G_5 are shown in Figure 2, and thus $|V_2(G_0)| = 7$. By $\alpha'(G) \leq 6$, we have $|\Lambda(G) \cap V_2(G_0)| \leq 6$. If $|\Lambda(G) \cap V_2(G_0)| \leq 4$, then G has a dominating trail. If $|\Lambda(G) \cap V_2(G_0)| = 6$, then there exists an edge in $G_0 - \Lambda(G) \cap V_2(G_0)$. This implies that $\alpha'(G) \geq 7$, a contradiction.

Hence we have $|\Lambda(G) \cap V_2(G_0)| = 5$. If there exists a pair of vertices $u_1, u_2 \in \Lambda(G) \cap V_2(G_0)$ such that $u_1u_2 \in E(C)$, then one can easily check that G has a

dominating trail. Thus for any pair of vertices $u_1, u_2 \in \Lambda(G) \cap V_2(G_0)$, it holds that $u_1u_2 \notin E(C)$. This implies that $G - \Lambda(G) \cap V_2(G_0)$ contains a P_4 and then $\alpha'(G - \Lambda(G) \cap V_2(G_0)) = 2$, hence $\alpha'(G) = 7$, a contradiction.

Case 2. $|V(C)| = 8$. By Claim 19, $|V(G_0)| = 10$. Hence by Lemma 11, $G_0 \in \{G_1, G_2\}$, where G_1, G_2 are shown in Figure 1. Since G has no dominating trail and $\alpha'(G) \leq 6$, $V_2(G_0) = \Lambda(G)$ and hence $G \in \mathcal{C}_1 \cup \mathcal{C}_2$. The proof is complete. ■

***Proof of Theorem* 15.** By contradiction, suppose that G is a counterexample to the theorem such that the number of super-blocks is minimized. By Theorem 9, G has no dominating trail.

Claim 20. *For any outer-super-block F of G, and for any cycle C of F containing a cut vertex v of G_0, it holds that $E(F - V(C)) \neq \emptyset$ and $\alpha'(F - V(C)) \geq 1$.*

Proof. By contradiction, suppose that $E(F - V(C)) = \emptyset$. Let H be the graph obtained from G by adding one pendant edge to v. Then $\alpha'(H/F) \leq \alpha'(G) - 2 + 1 \leq 6 - 2 + 1 = 5$.

Note that the number of super-blocks of H/F is less than G and $\kappa((H/F) \cap G_0) \leq 2$. Also note that $\alpha(L(H/F)) \leq 5$ and $\kappa(L(H/F)) \geq 2$. Then H/F has a dominating trail T; otherwise by the choice of G, the connectivity of $(H/F) \cap G_0$ is at least two, by Theorem 14, $(H/F) \in \mathcal{C}_1 \cup \mathcal{C}_2$ and hence $\alpha'(H/F) = 6$, contradicting $\alpha'(H/F) \leq 5$. This implies that $v \in V(T)$ and then $T \cup C$ is a dominating trail of G, a contradiction. This proves Claim 20. □

Note that G is triangle-free, $\alpha'(C) \geq 2$ for any cycle C of G.

Claim 21. $\alpha'(F) \geq 3$ *for any outer-super-block F of G.*

Proof. Let v be a cut vertex in G_0 in F and let C be a cycle of F that contains v. By Claim 20, $\alpha'(F - V(C)) \geq 1$, then $\alpha'(F) \geq \alpha'(C) + \alpha'(F - V(C)) \geq 2 + 1 = 3$. This proves Claim 21. □

Since $\kappa(G_0) = 1$, G has at least two outer-super-blocks. Furthermore, we have the following fact.

Claim 22. *G has exactly two outer-super-blocks.*

Proof. Suppose, to the contrary, that G has at least three outer-super-blocks F_1, F_2 and F_3, then by Claim 21, $\alpha'(F_1 \cup F_2 \cup F_3) \geq \alpha'(F_1 \cup (F_2 \cup F_3 - V(F_2 \cap F_3))) = \alpha'(F_1 \cup (F_2 - V(F_2 \cap F_3)) \cup (F_3 - V(F_2 \cap F_3))) \geq \alpha'(F_1) + \alpha'(F_2 - V(F_2 \cap F_3)) + \alpha'(F_3 - V(F_2 \cap F_3)) \geq 3 + (3 - 1) + (3 - 1) = 7$, a contradiction. This proves Claim 22. □

By Claim 22, we may let F_1 and F_2 be all the outer-super-blocks of G such that v_i is a cut vertex of G_0 in F_i. In the following, we need to distinguish two cases to obtain our desired contradiction.

Case 1. G has at least two cut vertices. We claim that G has exactly one inner-super-block. Otherwise, assume that there exist two inner-super-blocks F_3 and F_4 of G such that $F_1 \cap F_3 \neq \emptyset$ and $F_2 \cap F_4 \neq \emptyset$, then $F_1 \cap F_3 = \{v_1\}$ and $F_2 \cap F_4 = \{v_2\}$. By Claim 21, $\alpha'(F_1 \cup F_2 \cup F_3 \cup F_4) = \alpha'(F_1 \cup F_2 \cup (F_3 \cup F_4 - \{v_1, v_2\})) \geq \alpha'(F_1)+\alpha'(F_2)+\alpha'(F_3 \cup F_4 - \{v_1, v_2\}) \geq 3+3+1 = 7$, a contradiction.

Let F be the only one inner-super-block of G. Then $F_1 \cap F = \{v_1\}$ and $F_2 \cap F = \{v_2\}$. Let P be a path in F joining v_1 and v_2. Then P dominates all the edges of F; otherwise, $\alpha'(F - V(P)) \geq 1$, then by Claim 21, $\alpha'(G) = \alpha'(F_1 \cup F \cup F_2) \geq \alpha'(F_1 \cup (F - V(P)) \cup F_2) = \alpha'(F_1) + \alpha'(F - V(P)) + \alpha'(F_2) \geq 3+1+3 = 7$, a contradiction.

Claim 23. *For each $i \in \{1, 2\}$, $c(F_i) \leq 5$.*

Proof. Assume, without loss of generality, that $c(F_1) \geq 6$. Let C be a longest cycle of F_1. Then $\alpha'(C) \geq 3$. If $v_1 \in V(C)$, then by Claim 20, $\alpha'(F_1 - V(C)) \geq 1$, thus $\alpha'(F_1) \geq \alpha'(C) + \alpha'(F_1 - V(C)) \geq 3 + 1 = 4$. By Claim 21, $\alpha'(G) = \alpha'(F_1 \cup F \cup F_2) \geq \alpha'(F_1) + \alpha'(F_2) \geq 4 + 3 = 7$, a contradiction. If $v_1 \notin V(C)$, then $\alpha'(F_1 - v_1) \geq \alpha'(C) \geq 3$. By Claim 21, $\alpha'(F_2 - v_2) \geq 3 - 1 = 2$, then $\alpha'(G) = \alpha'(F_1 \cup F \cup F_2) = \alpha'((F_1 - v_1) \cup F \cup (F_2 - v_2)) \geq \alpha'(F_1 - v_1) + \alpha'(F) + \alpha'(F_2 - v_2) \geq 3 + 2 + 2 = 7$, a contradiction. This proves Claim 23. □

Note that $F \cap G_0$ is 2-connected for any super-block of G. By Claim 23 and Lemma 10(iii), $F_i \cap G_0$ has a spanning trail T_i starting from v_i for $i \in \{1, 2\}$, then $T_1 \cup P \cup T_2$ is a dominating trail of G, a contradiction.

Case 2. G has only one cut vertex v. Then $F_1 \cap F_2 = \{v\}$.

Claim 24. *For each $i \in \{1, 2\}$, $\alpha'(F_i - v) \leq 3$.*

Proof. By contradiction, assume without loss of generality that $\alpha'(F_1 - v) \geq 4$. By Claim 21, $\alpha'(F_2) \geq 3$ and then $\alpha'(G) \geq \alpha'(F_1 - v) + \alpha'(F_2) \geq 4 + 3 = 7$, a contradiction. This proves Claim 24. □

Claim 25. *For each $i \in \{1, 2\}$, if $c(F_i) \geq 6$, then F_i has a dominating trail that starts at v.*

Proof. Without loss of generality, we may assume that $c(F_1) \geq 6$. It suffices to show that F_1 has a dominating trail starting from v. Let $C = u_0u_1 \cdots u_{c(F_1)-1}u_0$ be a longest cycle of F_1. If $E(F_1 - V(C)) = \emptyset$, then $v \in V(C)$ or v is adjacent to C, thus $\langle \{v\} \cup V(C) \rangle_G$ contains a dominating trail of F_1 starting from v.

Hence we assume that $F_1 - V(C)$ has a nontrivial component D. Furthermore, D is the only one nontrivial component of $F_1 - V(C)$; otherwise $\alpha'(F_1 - V(C)) \geq 2$. Since $|V(C)| \geq 6$, $\alpha'(C) \geq 3$, then $\alpha'(F_1) \geq \alpha'(F_1 - V(C)) + \alpha'(C) \geq 2+3 = 5$. By Claim 21, $\alpha'(F_2 - v) \geq 3 - 1 = 2$, then $\alpha'(G) \geq \alpha'(F_1 \cup F_2) = \alpha'(F_1 \cup (F_2 - v)) \geq \alpha'(F_1) + \alpha'(F_2 - v) \geq 5 + 2 = 7$, a contradiction.

If $|V(C)| \geq 7$, then $v \notin V(C)$, since otherwise $\alpha'(F_1 - v) \geq \alpha'(C - v) + \alpha'(D) \geq 3 + 1 = 4$, contradicting Claim 24. Let P be a longest path in F_1 connecting v and C. Since $|V(C)| \geq 7$ and by Claim 24, P is an edge and $E(F_1 - V(C) \cup \{v\}) = \emptyset$, then $\langle \{v\} \cup V(C) \rangle_G$ contains a dominating trail of F_1 starting from v.

Hence we assume that $|V(C)| = 6$, then $\alpha'(C) = 3$. Let $D \cap G_0$ be a k-component of $F_1 \cap G_0 - V(C)$. Since C is a longest cycle of F_1 and by Lemma 10(i), $k \leq 2$. Now we need to consider the following two possibilities.

(a) $k = 1$. It means that $D \cap G_0$ is a vertex w, then w dominates all edges of D. Since D is nontrivial, we may take a pendant edge ww' of G. Suppose first that $v \notin V(C)$. Since $\alpha'(C) = 3$ and by Claim 24, $E(F_1 - V(C) \cup \{v\}) = \emptyset$. Therefore, since D is the only one nontrivial component of $F_1 - V(C)$, $v \in V(D)$. Furthermore, since v is the cut vertex of G_0, we have $v = w$, hence $\langle \{v\} \cup V(C) \rangle_G$ contains a dominating trail of F_1 starting from v.

Now suppose that $v \in V(C)$. Without loss of generality, we may let $v = u_0$. If $\{wu_0, wu_1, wu_5\} \cap E(G) \neq \emptyset$, then $\langle \{w\} \cup V(C) \rangle_G$ contains a dominating trail of F_1 starting from v. Hence we assume that $\{wu_0, wu_1, wu_5\} \cap E(G) = \emptyset$, then $N_{G_0}(w) \cap V(C) \subseteq \{u_2, u_3, u_4\}$. Since $F_1 \cap G_0$ is 2-connected, w has at least two neighbors on C, then $|N_{G_0}(w) \cap \{u_2, u_3, u_4\}| \geq 2$. Since C is a longest cycle of F_1, u has exactly two neighbors in $\{u_2, u_3, u_4\}$ and it should be u_2, u_4. Furthermore, u_1 has no neighbour in $F_1 - V(C)$; otherwise, assume that u_1 has a neighbor z in $F_1 - V(C)$, then $\{u_1 z, u_2 u_3, u_4 u_5, ww'\}$ is a matching of $F_1 - v$ of size 4, contradicting Claim 24. Therefore, $u_0 u_5 u_4 u_3 u_2 w$ is a dominating trail of F_1 starting from u_0.

(b) $k = 2$. By Lemma 10(ii), $D \cap G_0$ is a star with center x and leaves $y_1, \ldots, y_s$. Suppose first that $v \in V(C)$. Without loss of generality, we may let $v = u_0$. Since $|V(C)| = 6$, $\alpha'(C - v) = 2$. Therefore, by Claim 24, $|\Lambda(G) \cap \{y_1, \ldots, y_s\}| \leq 1$. Without loss of generality, we may assume that $\Lambda(G) \cap \{y_1, \ldots, y_s\} \subseteq \{y_1\}$, then xy_1 dominates all the edges of D. If $\{xu_0, xu_1, xu_5, y_1 u_0, y_1 u_1, y_1 u_5\} \cap E(G) \neq \emptyset$, then $\langle \{x, y_1\} \cup V(C) \rangle_G$ contains a dominating trail of F_1 starting from v. Hence we assume that $\{xu_0, xu_1, xu_5, y_1 u_0, y_1 u_1, y_1 u_5\} \cap E(G) = \emptyset$, then $N_{G_0}(x) \cap V(C) \subseteq \{u_2, u_3, u_4\}$ and $N_{G_0}(y_1) \cap V(C) \subseteq \{u_2, u_3, u_4\}$, this yields a cycle of length at least 7 in F_1, contradicting $c(F_1) = 6$.

Now suppose that $v \notin V(C)$. Since $\alpha'(C) = 3$ and by Claim 24, $E(F_1 - V(C) \cup \{v\}) = \emptyset$. Therefore, since D is the only one nontrivial component of $F_1 - V(C)$, $v \in V(D)$. Furthermore, since v is the cut vertex of G_0, $v \in \{x, y_1, \ldots, y_s\}$. Note that $E(D - v) = \emptyset$, we have $|\{y_1, \ldots, y_s\} \cap \Lambda(G)| \leq 1$. Without loss of generality, we may assume that $\{y_2, \ldots, y_s\} \cap \Lambda(G) = \emptyset$, then xy_1 dominates all edges of D. If $v = x$, then clearly $\langle \{x, y_1\} \cup V(C) \rangle_G$ contains a dominating trail of F_1 starting from v. Hence we assume that $v \in \{y_1, \ldots, y_s\}$, then by $E(D - v) = \emptyset$, we have $s = 1$ and hence $v = y_1$, thus $\langle \{x, y_1\} \cup V(C) \rangle_G$ contains a dominating trail of F_1 starting from v. This proves Claim 25. $\square$

Note that $F \cap G_0$ is 2-connected for any super-block of G. Claim 25 and Lemma 10(iii) imply that F_i has dominating trail T_i starting from v for $i \in \{1, 2\}$, then $T_1 \cup T_2$ is a dominating trail of G. The proof is complete. ■

4. Concluding Remarks

In [3], in order to show Theorem 5, Chen proved a more general result that if H is k-connected claw-free graph with $\alpha(H) \leq r$, then H is Hamiltonian or its Ryjáček's closure $cl(H) = L(G)$ where G can be contracted a k-edge-connected K_3-free graph G_0' with $\alpha(G_0') \leq r$ and $|V(G_0')| \leq \max\{3r - 5, 2r + 1\}$ if $k \geq 3$ or $|V(G_0')| \leq \max\{4r - 5, 2r + 1\}$ if $k = 2$. Note that the Hamiltonian property is stronger than the traceable property, so Chen's result would be also a traceable version. Therefore, one possible way of the proofs is to show Theorem 6 by using Chen's result (the traceable version). Then we have to characterize all such graphs G_0' of order at most 19 that have no spanning trail, which would be very complicated. In our proof, we avoid to use Chen's idea and use Lemma 10 instead.

In this paper, we give a sufficient condition on the independence number for a 2-connected claw-free graph to be traceable. Lemma 10 allows us to avoid many cases discussion. A similar problem is to consider 3-connected claw-free traceable graphs by using the same condition. However, our proof indicates that it becomes very complicated and it would need a new tool.

Acknowledgements

The work is supported by the Natural Science Funds of China (No:11471037, 11671037).

References

[1] J.A. Bondy and U.S.R. Murty, Graph Theory, Graduate in Mathematics (Springer, 2008).

[2] S. Brandt, O. Favaron and Z. Ryjáček, *Closure and stable Hamiltonian properties in claw-free graphs*, J. Graph Theory **34** (2000) 30–41.
doi:10.1002/(SICI)1097-0118(200005)34:1⟨30::AID-JGT4⟩3.0.CO;2-R

[3] Z. Chen, *Chvátal-Erdős type conditions for Hamiltonicity of claw-free graphs*, Graphs Combin. **32** (2016) 2253–2266.
doi:10.1007/s00373-016-1716-9

[4] V. Chvátal and P. Erdős, *A note on Hamilton circuits*, Discrete Math. **2** (1972) 111–113.
doi:10.1016/0012-365X(72)90079-9

[5] R. Faudree, E. Flandrin and Z. Ryjáček, *Claw-free graphs—A survey*, Discrete Math. **164** (1997) 87–147.
doi:10.1016/S0012-365X(96)00045-3

[6] E. Flandrin and H. Li, *Further result on neighbourhood intersections*, Report de Recheche, L.R.I. **416**, Univ. Paris-Sud, Orsay (1989).

[7] F. Harary and C. Nash-Williams, *On Eulerian and Hamiltonian graphs and line graphs*, Canad. Math. Bull. **8** (1965) 701–710.
doi:10.4153/CMB-1965-051-3

[8] D. Li, H. Lai and M. Zhan, *Eulerian subgraphs and Hamilton-connected line graphs*, Discrete Appl. Math. **145** (2005) 422–428.
doi:10.1016/j.dam.2004.04.005

[9] Z. Niu, L. Xiong and S. Zhang, *Smallest* 2*-edge-connected graphs without a spanning trail*, Util. Math. **88** (2012) 381–397.

[10] Z. Ryjáček, *On a closure concept in claw-free graphs*, J. Combin. Theory Ser. B **70** (1997) 217–224.
doi:10.1006/jctb.1996.1732

[11] S. Wang and L. Xiong, *Forbidden pairs for traceability of* 2*-connected graphs*, submitted.

[12] J. Xu, P. Li, Z. Miao, K. Wang and H. Lai, *Supereulerian graphs with small matching number and* 2*-connected Hamiltonian claw-free graphs*, Int. J. Comput. Math. **91** (2014) 1662–1672.
doi:10.1080/00207160.2013.858808

Received 13 September 2016
Revised 12 December 2017
Accepted 30 December 2017